US00D780750S

(12) United States Design Patent

Yu

(10) Patent No.: US D780,750 S
(45) Date of Patent: ** Mar. 7, 2017

(54) **MULTIMODE DISPLAY DEVICE**

(71) Applicant: **Lenovo (Beijing) Co., Ltd.**, Beijing (CN)

(72) Inventor: **Fei Yu**, Beijing (CN)

(73) Assignee: **Lenovo (Beijing) Co., Ltd.**, Beijing (CN)

(**) Term: **14 Years**

(21) Appl. No.: **29/520,509**

(22) Filed: **Mar. 16, 2015**

(30) **Foreign Application Priority Data**

Sep. 30, 2014 (CN) 2014 3 0372668

(51) **LOC (10) Cl.** **14-02**

(52) **U.S. Cl.**
USPC **D14/371**

(58) **Field of Classification Search**
USPC D14/371–375, 125–129, 336, 337, 341, D14/239; 341/12; 345/104, 156, 168, 345/173; 348/180, 184, 325, 739; 349/1, 349/2, 11, 62; 361/679.05–679.07, 361/679.21; D6/300, 308
CPC G06F 1/16; G06F 1/1601; G06F 3/037; G06F 1/162; F16M 11/02; F16M 11/10; F16M 11/00; F16M 11/06; F16M 11/18
See application file for complete search history.

(56) **References Cited**

U.S. PATENT DOCUMENTS

D333,933	S *	3/1993	Feinbloom	D6/681
D424,068	S *	5/2000	Takemasa	D14/126
D439,225	S *	3/2001	Kita	D14/126
D462,678	S *	9/2002	Abboud	D14/304
D599,755	S *	9/2009	Jin	D14/126
D653,245	S *	1/2012	Buzzard	D14/239
D671,083	S *	11/2012	Kim	D14/126
D677,655	S *	3/2013	Sirotich	D14/305
D709,842	S *	7/2014	Lee	D14/126
2003/0058372	A1 *	3/2003	Williams	F16M 11/18 348/836
2004/0217244	A1 *	11/2004	Wu	F16M 11/06 248/278.1

(Continued)

Primary Examiner — Freda S Nunn
(74) *Attorney, Agent, or Firm* — Oppedahl Patent Law Firm LLC

(57) **CLAIM**

The ornamental design for a multimode display device, as shown and described.

DESCRIPTION

FIG. **1** is a left side view of a multimode display device wherein the broken lines are shown for environment only and form no part of the claimed design;
FIG. **2** is an enlarged detailed section thereof as indicated in FIG. **1**;
FIG. **3** is a perspective view thereof shown in another position;
FIG. **4** is an enlarged detailed section thereof as indicated in FIG. **3**;
FIG. **5** is a left side view of a second embodiment thereof;
FIG. **6** is an enlarged detailed section thereof as indicated in FIG. **5**;
FIG. **7** is a perspective view thereof shown in another position; and,
FIG. **8** is an enlarged detailed section thereof as indicated in FIG. **7**.
The portions of the article not shown in the drawings form no part of the claimed design.

1 Claim, 4 Drawing Sheets

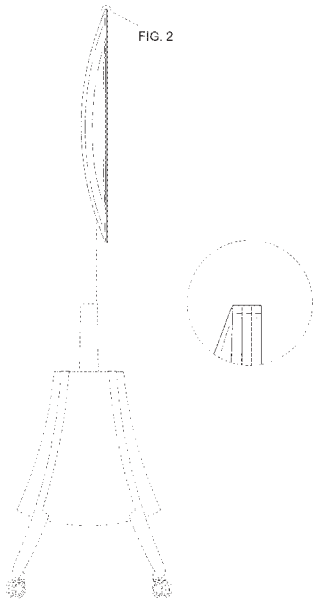

(56) **References Cited**

U.S. PATENT DOCUMENTS

2010/0148458 A1* 6/2010 Ross A61M 16/0051
280/47.34

* cited by examiner

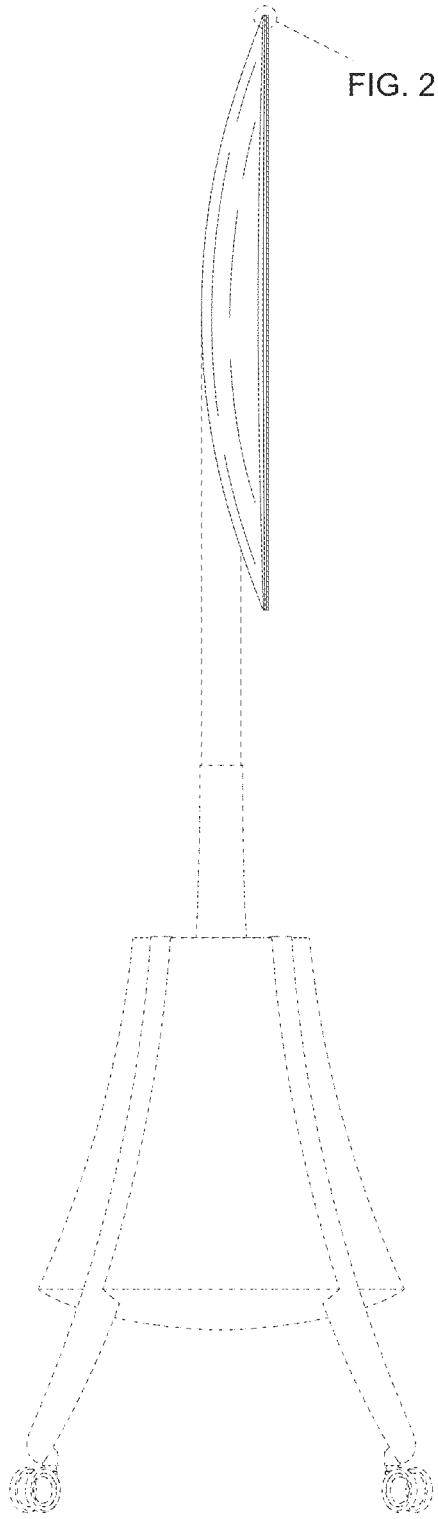

FIG. 1

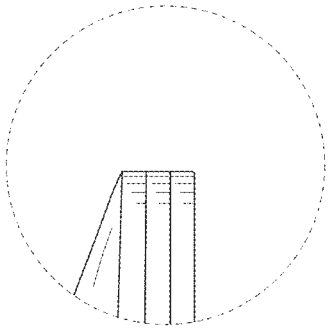

FIG. 2

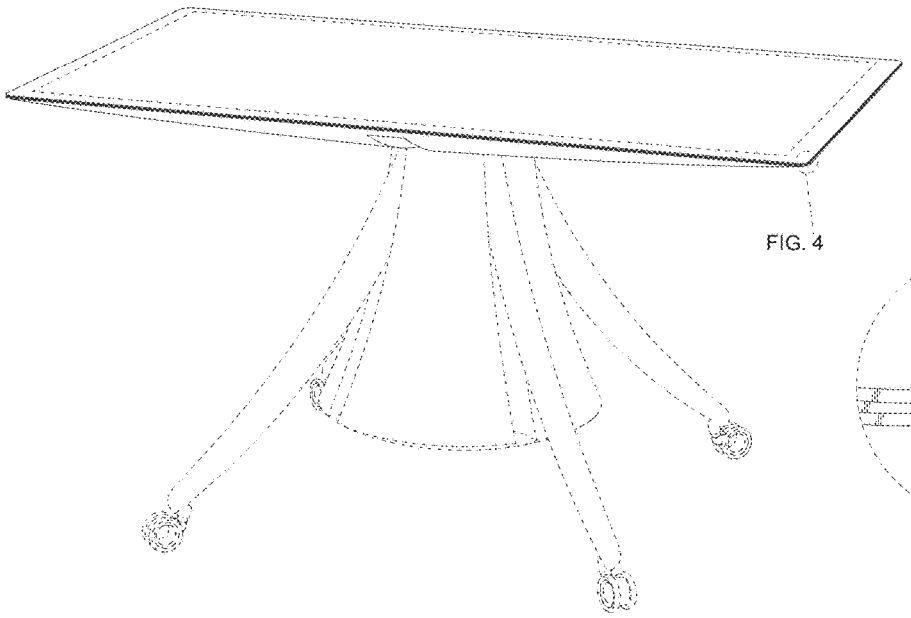

FIG. 3

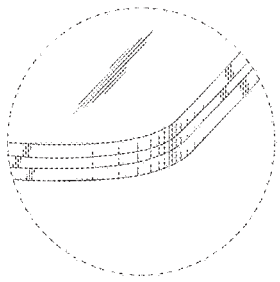

FIG. 4

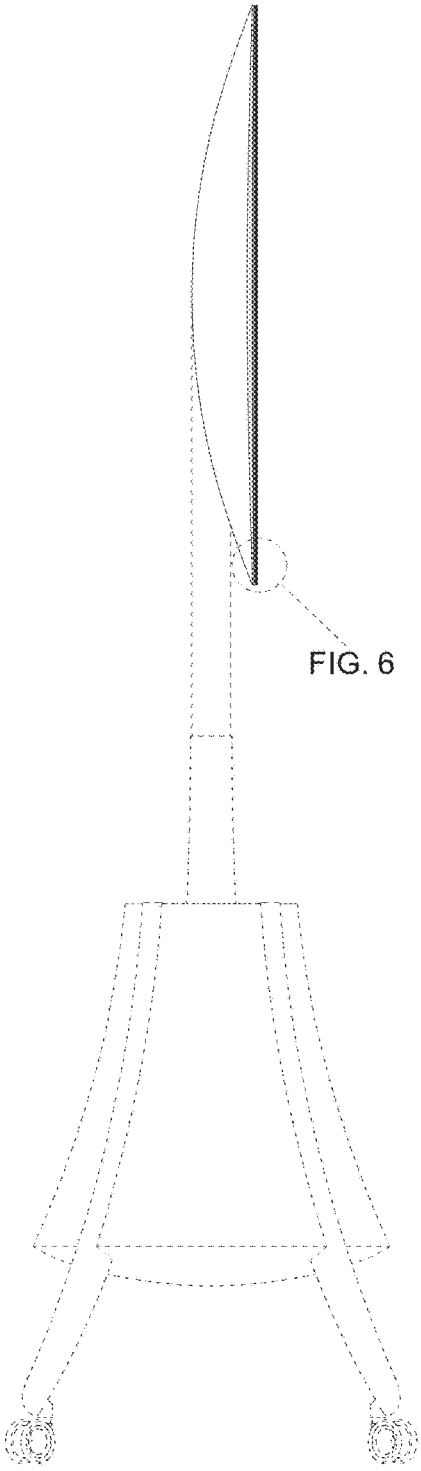

FIG. 5

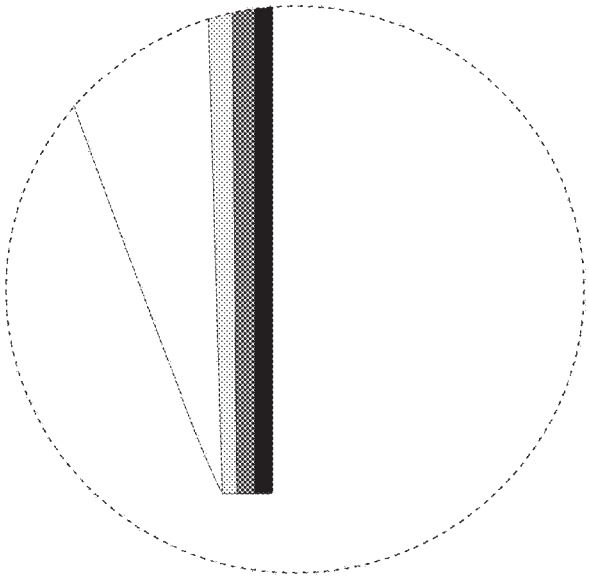

FIG. 6

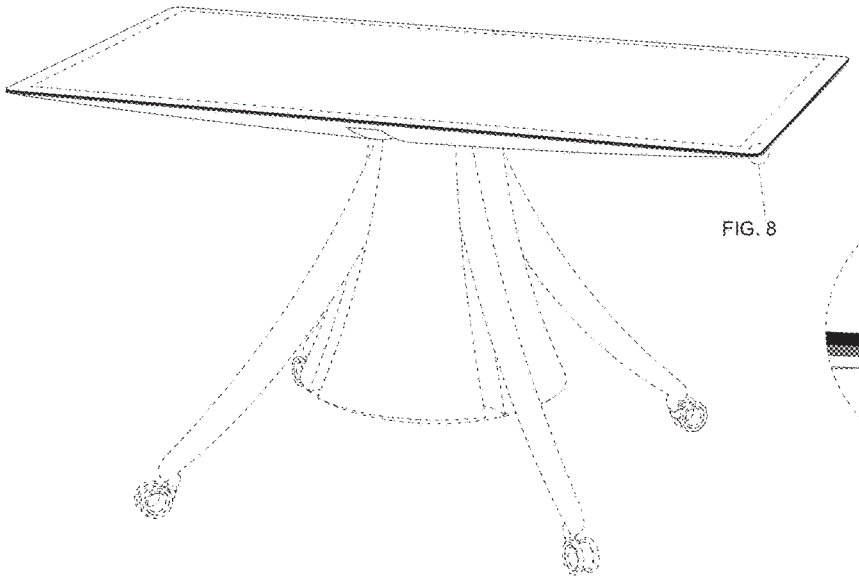

FIG. 7

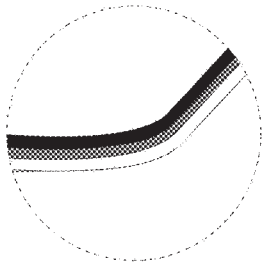

FIG. 8