US009617071B2

(12) **United States Patent**
Lorenzen

(10) **Patent No.: US 9,617,071 B2**
(45) **Date of Patent: Apr. 11, 2017**

(54) **LID SENSOR AND RETROFIT SYSTEM**

(71) Applicant: **Sensor Solutions Corp.**, Steamboat Springs, CO (US)

(72) Inventor: **David Lorenzen**, Steamboat Springs, CO (US)

(73) Assignee: **SENSOR SOLUTIONS CORP.**, Steamboat Springs, CO (US)

(*) Notice: Subject to any disclaimer, the term of this patent is extended or adjusted under 35 U.S.C. 154(b) by 0 days.

(21) Appl. No.: **15/036,205**

(22) PCT Filed: **Jan. 27, 2015**

(86) PCT No.: **PCT/US2015/013014**

§ 371 (c)(1),
(2) Date: **May 12, 2016**

(87) PCT Pub. No.: **WO2015/113021**

PCT Pub. Date: **Jul. 30, 2015**

(65) **Prior Publication Data**

US 2016/0288994 A1 Oct. 6, 2016

Related U.S. Application Data

(60) Provisional application No. 61/932,071, filed on Jan. 27, 2014.

(51) **Int. Cl.**
G08B 21/00 (2006.01)
B65D 90/22 (2006.01)
(Continued)

(52) **U.S. Cl.**
CPC ***B65D 90/22*** (2013.01); ***B65D 90/10*** (2013.01); ***B65D 90/48*** (2013.01); *B65D 2211/00* (2013.01)

(58) **Field of Classification Search**
CPC B65D 90/48; B65D 90/10; B65D 90/22; B65D 39/00; F17C 13/00; F17C 13/002;
(Continued)

(56) **References Cited**

U.S. PATENT DOCUMENTS

4,168,613 A * 9/1979 Nakagawa B60T 11/22 137/576
5,006,046 A * 4/1991 Buckman F04F 1/08 166/372
(Continued)

FOREIGN PATENT DOCUMENTS

JP 02-040821 A 2/1990
JP 10-248139 A 9/1998
(Continued)

OTHER PUBLICATIONS

International Search Report in international application No. PCT/US2015/013014 dated May 1, 2015.
(Continued)

Primary Examiner — Ryan Sherwin
(74) *Attorney, Agent, or Firm* — Oppedahl Patent Law Firm LLC

(57) **ABSTRACT**

A non-contact lid sensor is provided for use with an oil field thief hatch and a latch. The sensor is mounted to the latch and comprises a reed switch. The latch pin is removed and embedded with a magnet with the magnet's north-south poles parallel to the pin's length so that the magnet triggers the reed switch. The reed switch is oriented so that it is perpendicular to the lower latch pin and the face of the sensor. The magnet and reed switch are aligned so that when the lid is closed the reed switch never sees the 0 Gauss line of the magnet. When the latch is in a closed position the reed switch allows the current to pass through the sensor and
(Continued)

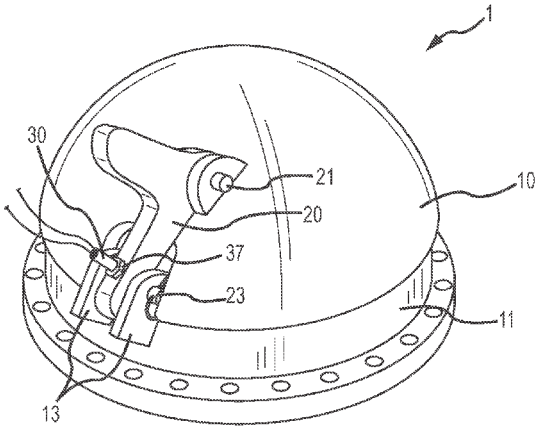

signal that the hatch is closed. The sensor system also allows for a Hall effect sensor to be used.

54 Claims, 6 Drawing Sheets

(51) **Int. Cl.**
B65D 90/10 (2006.01)
B65D 90/48 (2006.01)

(58) **Field of Classification Search**
CPC F17C 13/004; F17C 13/005; F17C 13/02; F17C 13/06; F17C 1/00; F17C 3/00
See application file for complete search history.

(56) **References Cited**

U.S. PATENT DOCUMENTS

6,441,610	B2 *	8/2002	Graff	G01B 7/14 324/207.2
2004/0134239	A1	7/2004	Hapke	
2009/0236012	A1 *	9/2009	Gass	B23Q 11/0092 144/427

FOREIGN PATENT DOCUMENTS

JP	2003-284896	A	10/2003
JP	2005-181453	A	7/2005

OTHER PUBLICATIONS

International Preliminary Report on Patentability in international application No. PCT/US2015/013014 dated Apr. 5, 2016.

* cited by examiner

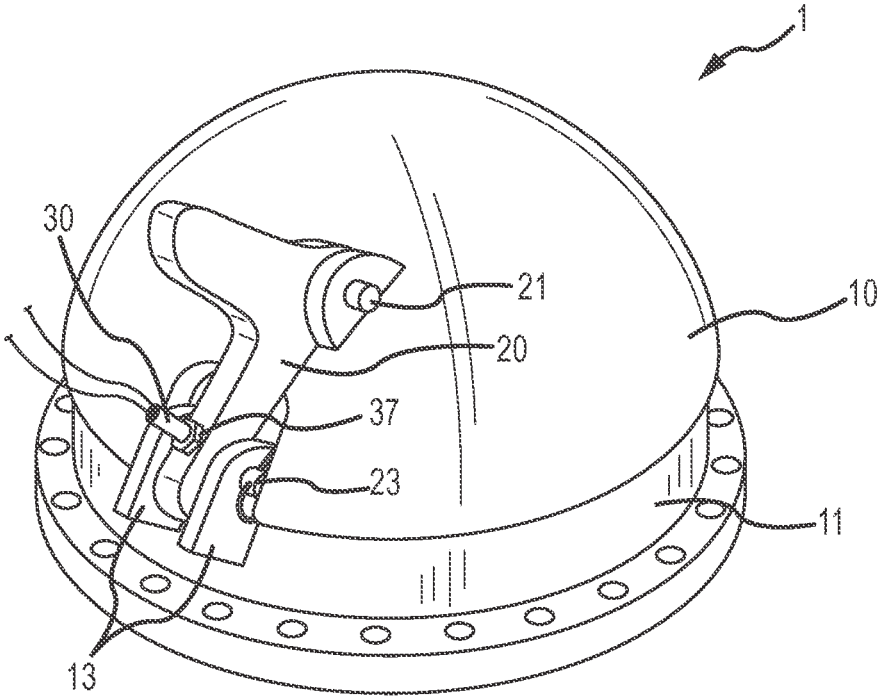

FIG.1

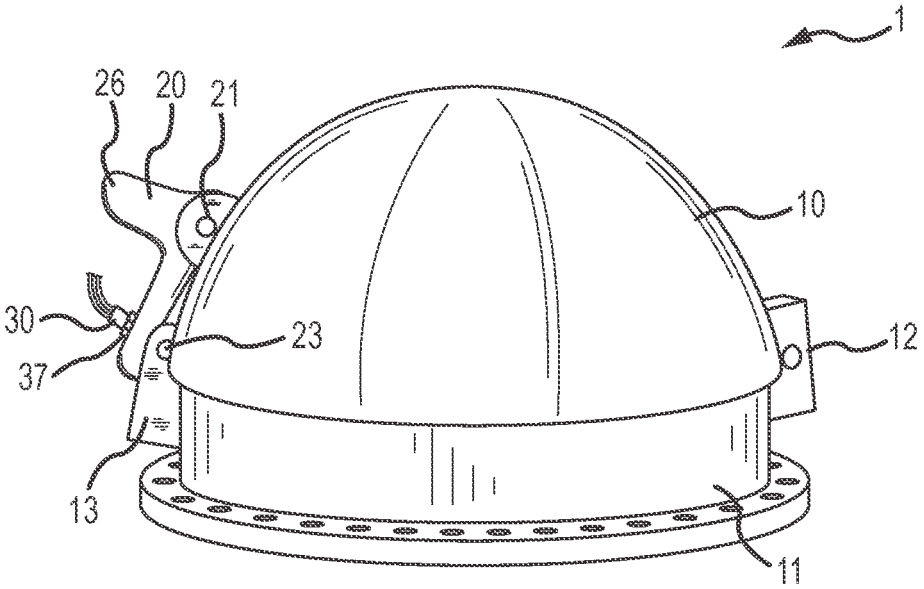

FIG.2

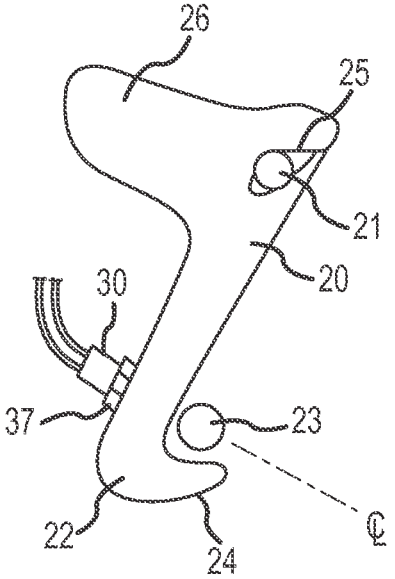

FIG.3

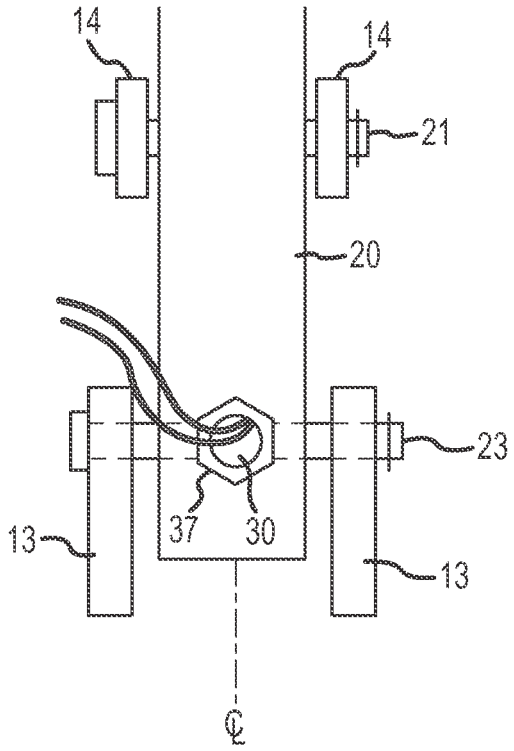

FIG.4

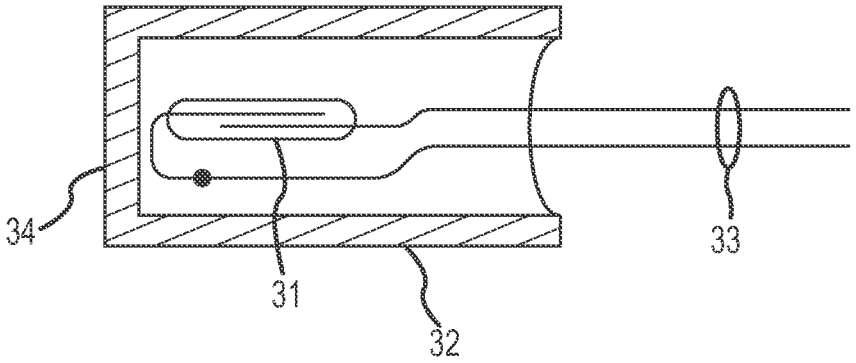

FIG.5

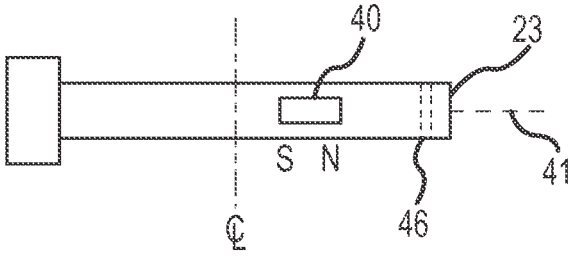

FIG.6a

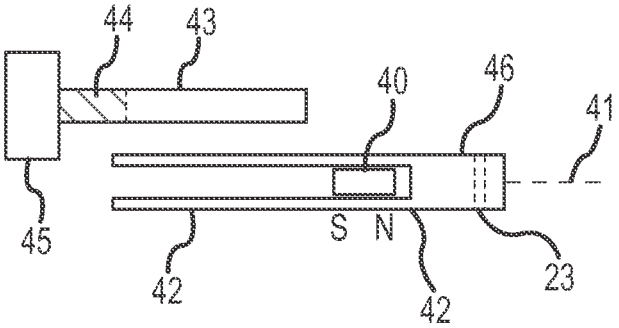

FIG.6b

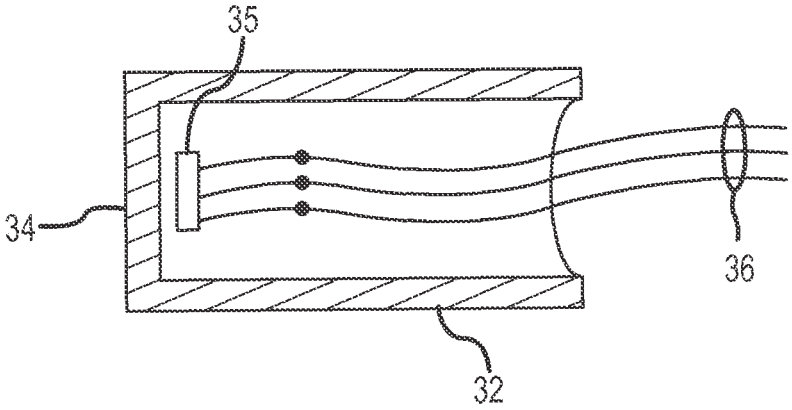

FIG.7

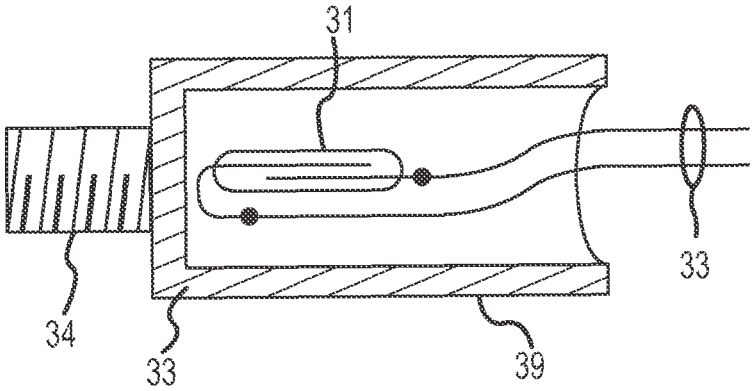

FIG.8a

FIG.8b

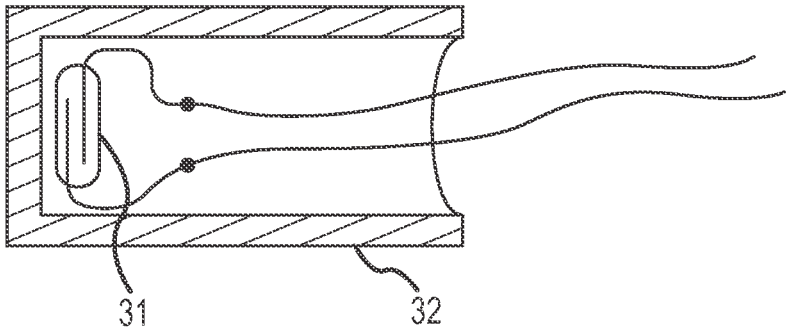

FIG.9

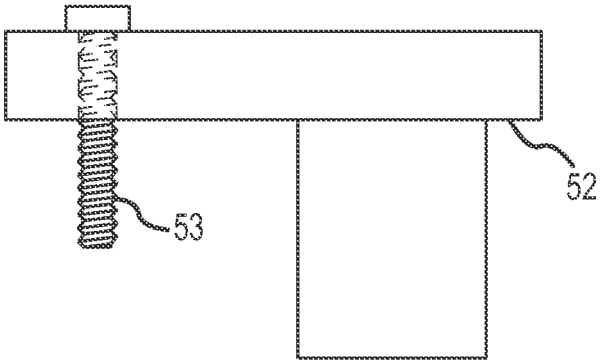

FIG.10

LID SENSOR AND RETROFIT SYSTEM

CROSS REFERENCE APPLICATIONS

This application claims the benefit of provisional application No. 61/932,071 filed Jan. 27, 2014 that is incorporated herein by reference for all purposes.

BACKGROUND

An oil field thief hatch is a closable hatch on an oil field tank or vessel. Thief hatches are typically used on low pressure and atmospheric tanks. The hatch allows for samples to be taken on the material inside, the volume of the tank to be measured, and for protecting the tank from over pressure and vacuum. Leaving the thief hatch open on a fuel storage tank can be very expensive. Fines vary from state to state with some fines being as much as $15,000 per hatch per date and these fines are ever increasing. Additionally, a hatch that appears closed, but is not latched will cost just as much in fines as one left fully open. It is thus desirable to provide a sensor system that can monitor the closed state of a thief hatch.

It is not easy to know if a hatch is fully latched as often these tanks are in the middle of a field and spaced far apart from one another. To check closure of the tank lid manual inspection is often necessary, which is time consuming and labor intensive, especially with hundreds of thousands of tanks in use. Other monitoring options include custom software sensing systems that tend to be extremely expensive and hard to install. It is thus desirable to provide a sensor system for monitoring thief hatches both new and existing with simple installation. It is also desirable to create a sensor system that can be retrofitted onto existing oil field tank lids with materials and procedures that can be used in the field.

SUMMARY

A non-contact lid sensor is provided for use with an oil field thief hatch and a latch. The sensor is mounted to the latch and comprises a reed switch. The latch pin is removed and embedded with a magnet with the magnet's north-south poles parallel to the pin's length so that the magnet triggers the reed switch. The reed switch is oriented so that it is perpendicular to the lower latch pin and the face of the sensor. The magnet and reed switch are aligned so that when the lid is closed the reed switch never sees the 0 Gauss line of the magnet. When the latch is in a closed position the reed switch allows the current to pass through the sensor and signal that the hatch is closed. The sensor system also allows for a Hall effect sensor to be used.

The apparatus for sensing closure of a latch to a thief hatch lid comprises a lid and a latch with an upper section being pivotally connected to the lid at a first location, and a lower section being in the shape of a claw. A pin is removably connected to the lid at a second location, where the claw of the latch engages with the pin to close the lid. A magnet is embedded in the pin and oriented with its magnetic poles parallel to the longitudinal axis of the pin. A sensor with a housing and a front face mounted within the latch such that the front face of the sensor is juxtaposed to the pin. The sensor is a reed switch positioned perpendicular to the front face of the sensor and to the longitudinal axis of the pin, and the magnet is offset with the front face of the sensor and the reed switch. The pin comprises three pieces a holder being cylindrical and having a cavity to insert a magnet. A press pin being cylindrical with knurls on one end and having a nail head where the press pin is insertable into the holder, securing the magnet, and locking the press pin and the holder together.

BRIEF DESCRIPTION OF THE DRAWINGS

The invention will be described with respect to a drawing in several figures, of which:

FIG. **1** shows a perspective view of the entire lid assembly and latch assembly.

FIG. **2** shows a side view of the entire lid assembly and latch assembly.

FIG. **3** shows a side detail view of the latch assembly.

FIG. **4** shows a front detail view of the latch assembly.

FIG. **5** shows a detail view of a reed switch in a first embodiment housing.

FIG. **6***a* shows a detail view of the lower pin.

FIG. **6***b* shows an exploded view of the lower pin assembly.

FIG. **7** shows a detail view of a Hall effect sensor.

FIG. **8***a* shows a detail view of the reed switch in a second embodiment housing.

FIG. **8***b* shows a sectional view of the second embodiment housing.

FIG. **9** shows a detail view of an alternate position of the reed switch.

FIG. **10** shows a detail view of the flange mount.

DETAILED DESCRIPTION OF THE DRAWINGS

FIG. **1** shows a perspective view of the thief hatch sensing system on an oil field tank. The overall lid assembly **1** has a lid cover **10** and a mounting collar **11**, the mounting collar **11** attaches to a tank opening, not shown, and the lid assembly **1** allows access to inside the tank. On one side of the lid assembly **1** there is a hinge **12**, see FIG. **2** the side view of the lid assembly **1**, the hinge **12** allows the lid cover **10** to rotate about the mounting collar **11** to open the lid assembly **1** and allow access to the tank opening. On the other side of the lid assembly **1** there is a latch assembly **2** that secures the lid cover **10** in a closed position on the mounting collar **11** preventing access to the tank opening.

The latch assembly **2**, as seen in detail in FIG. **3**, has a hook latch **20**, the upper/top part of the latch **20** is pivotally connected to the lid cover **1** by an upper/top through pin **21**. The upper pin **21** goes through openings in both the upper part of the latch **20** and a flange **14**, shown in FIG. **4**, protruding from the lid cover **10** allowing the latch **20** to rotate about the longitudinal center line of the upper pin **21**. The lower/bottom of the latch **20** is a claw **22** that engages the lower/bottom through pin **23** to secure the lid cover **10** in a closed position. The lower pin **23** goes through two flanges **13**, shown in FIG. **4**, on the mounting collar **11**. The two flanges **13** are spaced apart so that the claw **22** can fit between and hook around the exposed part of the lower pin **23**. In the depicted embodiment, the latch **20** has a spring **25** at the upper pin **21** that urges the claw **22** toward the lower pin **23**. To secure the claw **22** around the lower pin **23** the lid cover **10** is pushed down. The claw **22** has a bevel **24** that allows the claw **22** to move in an outward direction, by compressing the spring **25**, around the lower pin **23** when closing the lid cover **10**. After the claw **22** moves around the lower pin **23**, the claw **22** positively engages the lower pin **23** to secure the latch assembly **2**. To open the latch assembly **2** a user pulls up on the latch handle **25** which

directs the claw **22** away from the lower pin **23** allowing the lid cover **10** to be lifted in an upwards direction and open.

It is appreciated that while FIGS. **1-4** show the preferred latch arrangement on a cast aluminum thief hatch, other lid types, latch configurations, and materials can be substituted and the depicted embodiment is not limiting.

Turning back to FIG. **3**, a passive sensor **30** is attached to the outside face of the claw **22** located at the vertical center line or approximately close to the vertical center line of the outside face of the claw **22** and the horizontal lower pin **23** position. The sensor **30** is mounted to the latch **20** by drilling the latch **20**, preferably all the way through the material, and tapping the hole allowing the sensor housing **32** to thread into the hole. In one embodiment, shown in FIG. **5**, the sensor housing **32** is cylindrical in shape and secured to the latch **20** by two outside lock nuts **37**, shown in FIG. **3**. In an alternate embodiment, shown in FIGS. **8***a* and **8***b*, the sensor housing **38** has a front face **34** with a small threaded cylindrical section and a larger partially cylindrical section **39** with a wrench flat **51** for installation. The large partially cylindrical section **39** will force the sensor housing **38** to stop at the latch **20** at the desired mounting position and lock in place because of the torque applied to the sensor housing **38**. To further secure the sensor **30** on the latch **20** a thread locking compound may also be used.

As shown in FIG. **5** the sensor **30** itself has a reed switch **31**, a housing **32** that is threaded, a front face **34**, and circuit wires **33**. The sensor **30** is mounted perpendicular to the outside face of the claw **22** and with the front face **34** slightly recessed, approximately ¼ inch, from the inside face of the claw **22** to minimize the possibility of sensor damage. It is appreciated that the front face **34** may also be flush against the inside face of the claw **22** to minimize the distance from the magnet **40**. In the depicted embodiments, the sensor housings **32**, **38** and locking nuts **37** are 300 series stainless steel to allow a magnetic field to pass through the housing and reach the reed switch, however, it is recognized that these assembly parts may be made of other materials as well. If the housing assembly is aluminum then the assembly may be anodized to help protect from oxidization of the aluminum-aluminum bond with the aluminum latch.

The reed switch **31** is a typical reed switch known in the art that is actuated by an applied magnetic field. The reed switch **31** contains a pair or more of magnetizable, flexible metal reeds whose ends portions are separated by a small gap in a hermetically sealed environment. When a magnetic field is applied to the reeds, the reeds will move together complete the electrical circuit. When the magnetic field is removed the reeds separate and open the circuit. In the exemplary embodiment a reed switch is used because of its sensitivity and protection from atmospheric corrosion. Additionally, the switch being hermetically sealed makes it suitable for use around combustible liquids, such as oil, where sparks would constitute a hazard. The reed switch **31** is attached to a printed circuit board (PCB) that mechanically supports and electrically connects the reed switch **31** with conductive tracks etched from copper sheets laminated on a non-conductive substrate.

In the depicted embodiment, the reed switch **31** is mounted perpendicular to the front face **34** within the housing **32**. This mounting forces the reed switch **31** to also be perpendicular to the outside face of the claw **22** and perpendicular to the longitudinal axis **41** of the lower pin **23**.

In order to trigger the reed switch **31** a magnet **40** is inserted into the cylindrical shaft of the lower pin **23**, as shown in FIG. **6***a*. The north-south poles of the magnet **40** are orientated along the longitudinal axis **41** of the lower pin **23**. In the depicted embodiment the magnet **40** is pressed or potted into a replacement lower pin **23**, and the magnet **40** is a rare-earth magnet such as neodymium-iron-boron or samarium-cobalt. As shown in FIG. **6***b*, the replacement lower pin **23** consists of three parts: a holder **42**, a magnet **40**, and a press pin **43**. The holder **42** is drilled so that the magnet **40**, with the north-south poles oriented along the longitudinal axis **41**, fits within the holder **42**. The press pin **43** has knurls **44** and a pin head **45** so that the press pin **43** fits within the holder **42**, securing the magnet **40** inside and locking to the holder **42** by the knurls **44**. It is preferable to have the holder **42** with the smallest tolerance hole so that pin head **45** of the press pin **43** will always have a small gap to the holder **42** and the magnet **40** is always held tight. However, it is recognized that the holder **42** may be drilled with a larger tolerance hole so that the pin head **45** of the press pin **43** is flush with the holder **40**. Locking compound is also applied to the knurls **44** so that the press pin **43** and holder **42** connection is secured and the press pin **43** and holder **42** are kept together as one unit. The holder **42** has a hole **46** through the pin diameter to keep the assembled pin in place on the flanges **13** of the thief hatch with a cotter pin, not shown. In the depicted embodiment both the holder **42** and press pin **43** are manufactured out of aluminum, although other similar materials, such as 300 series stainless steel that allow magnetic fields to pass, may also be used.

It is recognized that the existing lower pin **23** may also be removed and drilled to embed a magnet **40** in the pin. Additionally, a new pin may be manufactured with magnetic material dispersed throughout the pin alloy providing a magnetic field in the pin. The magnet **40** may also be made of a conventional ferromagnetic material such as iron, nickel, or cobalt.

As shown in FIG. **6** the magnet **40** is inserted more than ½ of the way down the lower pin **23** so that the south pole of the magnet **40** is pointed to the center of the pin. It must be considered that the magnet **40** may be mounted in other locations and directions on the lower pin **23**. In order to increase the shear strength of the pin the magnet **40** may be inserted less than ½ of the way down the lower pin **23**. This described pin setup may also reduce the manufacturing cost of the three-part pin assembly. A reed switch is closed when one pole is present on one of the reed leads, and the other pole is present on the other lead. A reed switch is also closed if one pole is present on one bent lead as shown in FIG. **5**. However, if the reed switch lines up with the zero Gauss point of the magnet, the switch will not close. This means that the only location the magnet **40** cannot be located on the lower pin **23** is when the zero Gauss point is in line with the reed switch **31**. Therefore, the magnet **40** is preferably offset from the mounting point of the sensor **30**, on the outside face of the latch **20**.

The position of the reed switch as shown in FIG. **5** has advantages for installation. With the reed switch **31** oriented perpendicular to the front face **34**, overall rotational orientation of the sensor **30**, turning of the sensor **30** within the threaded mounting hole, does not matter when mounting on the outside face of the latch **20**. Additionally, with the magnet **40** oriented with the poles parallel to the lower pin's **23** length, overall rotational orientation of the lower pin **23**, turning of the pin **23** within the two flanges **13**, also does not matter.

The general method for sensing closure of a thief hatch lid comprises mounting the sensor **30**, with a housing **32** and a front face **34**. in the latch **20** by drilling a hole in the latch **20**, tapping the hole, and threading the sensor **30** in the hole. Inserting a pin **23** into the lid with a magnet **40** embedded

within and with the magnet's magnetic poles parallel to the longitudinal axis **41** of the pin **23**. The sensor **30** is a reed switch **31** and is positioned perpendicular to the front face **34** of the sensor **30** and the longitudinal axis **41** of the pin. The magnet **40** has its 0 Gauss line of the magnetic field is offset from the front face **34** of the sensor **40** and the reed switch **31**. The pin **23** comprises three parts: a holder **42**, a magnet **40**, and a press-pin **43**. The magnet **40** is inserted into the holder **42** and secured with the press-pin **43** so as to create one pin unit. Positioning the sensor **30** within the latch **20** so that the front face **34** of the sensor is juxtaposed to the pin **23**. The lid is closed and the latch **20** is engaged to the pin **23**.

As shown in FIG. **9**, the reed switch **31** may also be oriented parallel to the front face **34** in the sensor **30**. In this embodiment, rotational orientation of the reed switch **31** matters, and the reed switch **31** would have to be parallel to the magnet **40** to trigger the switch. If the reed switch **31** is perpendicular to the magnet **40** at the zero Gauss point the reed switch **31** would not work. Therefore, rotational orientation of the reed switch **31**, and thus the sensor **30**, when mounting on the outside face of the latch and the orientation would have to be closely controlled and monitored. However, this embodiment would allow the magnet **40** to be installed in the center of the lower pin **23**.

To mount the sensor **30**, with the reed switch **31** mounted parallel to the front face **34**, on the latch **20**, as shown in FIG. **9**, a main hole on the latch **20** is drilled. A second hole adjacent to the main hole is also drilled and tapped. As shown in FIG. **10**, a flange mount **52** is inserted into the main hole on the latch **20** and secured by a screw **53** in the second hole. It is preferable to secure the flange mount **52** with the screw **53** perpendicular to the reed switch **31**. The flange mount **52** allows the sensor **30** to be inserted, but only in a way that the reed switch **31** inside the sensor **30** is parallel to the north-south poles of the magnet **40** and parallel to the longitudinal axis **41** of the lower pin **23**. This restriction in the sensor **30** rotation allows the magnet **40** to trigger the reed switch **31**. In the depicted embodiment the flange mount **52** is zinc, however other material may be used such as plastic, stainless steel, or aluminum that allows for a magnetic field to pass.

The general method for sensing closure of a thief hatch lid using a flange mount comprises mounting a flange mount **52** by drilling a main hole in the latch **20**, drilling a second hole in the latch **20** adjacent to the main hole, tapping the second hole, and mounting the flange mount **52** to the latch **20** in the main hole and securing with a screw **53** in the second hole. Inserting the sensor **30**, with a housing **32** and a front face **34**, in the flange mount. Inserting a magnetized pin **23** in the lid and positioning the sensor **30** within the latch **20** so that the front face **34** of the sensor is juxtaposed to the pin **23**. The lid is closed and the latch **20** is engaged to the pin **23**.

In the depicted embodiment the sensor **30** is connected by wires **33** to a Class 1/Division 1 (C1/D1) rated wireless transmitter, not shown. Once the sensor **30** is installed and connected to the transmitter, the switch will only allow current to pass through the sensor when the hatch is closed and properly latched. As the sensor neither draws nor generates power, it can be qualified as a simple apparatus when installed behind a certified wireless transmitter. It must be appreciated that the sensor may also be attached to a non-wireless system to signal when the hatch is closed and properly latched.

FIG. **7** shows the sensor **30** in an alternative embodiment using a Hall effect sensor **35**. The Hall effect sensor **35** is a typical Hall effect sensor known in the art that changes the digital output state with the presence of a magnetic field. The Hall effect sensor **35** is mounted in the sensor housing **32** and circuit wires **36** that send the open/closed switch signal to a transmitter. The Hall effect sensor **35** has its face parallel to the front face **34**. The Hall effect sensor **35** can close when the magnet **40** in the lower pin **23** is offset from the sensor **30** mounting position. However, the Hall effect sensor **35** would not trigger if the zero Gauss point of the magnet **40** is in line with the Hall effect sensor **35**. Therefore, switching the type of switch in the sensor **30** is easy and the magnet **40** position on the lower pin **23** would not need to be changed. If the south pole of the magnet **40** is facing the center line of the sensor **30** then the Hall effect sensor **35** would be south pole sensitive. Although it is recognized that depending on the location of the magnet **40** the Hall effect sensor could also be north pole sensitive, or both pole sensitive.

I claim:

1. A method for sensing closure of a latch to a hatch lid, the method comprising:

mounting a sensor in the latch, the sensor having a housing and a front face;

inserting a pin in the lid, the pin containing a magnet having a magnetization and wherein the magnet is oriented with its poles parallel to a longitudinal axis of the pin;

wherein the sensor is positioned within the latch such that the front face of the sensor is juxtaposed to the pin;

closing the lid;

engaging the latch to the pin, whereby proximity of the sensor to the magnet indicates closure of the hatch lid, and

communicating closure of the hatch lid by the sensor.

2. The method according to claim **1** wherein the sensor is a reed switch, the reed switch positioned perpendicular to the front face of the sensor and to the longitudinal axis of the pin, and wherein a 0 Gauss line of a magnetic field of the magnet is offset from the front face of the sensor and the reed switch.

3. The method according to claim **2** wherein the step of inserting the pin in the lid further comprises:

inserting the magnet into a holder;

securing the magnet into the holder with a press-pin;

locking the press-pin and the holder together as one unit; and

wherein the pin comprises three parts, the holder, the magnet, and the press-pin.

4. The method according to claim **3** wherein the sensor has external threads, and wherein the step of mounting the sensor further comprises:

drilling a hole in the latch;

tapping the hole; and

threading the sensor into the hole.

5. The method according to claim **4** wherein the step of mounting the sensor further comprises applying thread lock compound to the sensor threads.

6. The method according to claim **5** wherein the front face is recessed within the hole in the latch.

7. The method according to claim **6** wherein the magnet is a rare-earth neodymium-iron-boron magnet.

8. The method according to claim **1** wherein the sensor is a Hall effect sensor, the Hall effect sensor positioned parallel to the front face of the sensor and to the longitudinal axis of the pin, and wherein a 0 Gauss line of a magnetic field of the magnet is offset from the front face of the sensor and the Hall effect sensor.

9. The method according to claim **1** wherein the step of inserting a pin in the lid further comprises:

removing an existing pin from the lid;
drilling an opening in the pin;
embedding a magnet in the pin;
replacing the pin in the lid.

10. The method according to claim **1**, further comprising:
communicating a status of the sensor to a printed circuit board, whereby the status of the sensor is communicated to a wireless transmitter;
broadcasting the status of the sensor from the wireless transmitter to a remote location.

11. A method for sensing closure of a latch to a hatch lid, the method comprising:
mounting a flange mount to the latch, the flange mount comprising:
a sensor, the sensor having a front face;
inserting a pin in the lid, the pin containing a magnet having a magnetization and wherein the magnet is oriented with its poles parallel to a longitudinal axis of the pin;
wherein the sensor is positioned within the latch such that the front face of the sensor is juxtaposed to the pin;
closing the lid;
engaging the latch to the pin, whereby proximity of the sensor to the magnet indicates closure of the hatch lid, and
communicating closure of the hatch lid by the sensor.

12. The method according to claim **11** wherein the sensor is a reed switch, the reed switch positioned parallel to the front face of the sensor and to the longitudinal axis of the pin, and wherein the magnet is in line with the front face of the sensor.

13. The method according to claim **12** wherein the step of mounting the flange mount further comprises:
drilling a main hole in the latch;
drilling a second hole in the latch, adjacent to the main hole;
tapping the second hole; and
mounting the flange mount to the latch in the main hole and securing the flange mount by a screw in the second hole.

14. The method according to claim **13** wherein the step of inserting the pin in the lid further comprises:
inserting the magnet into a holder;
securing the magnet into the holder with a press-pin;
locking the press-pin and the holder together as one unit; and
wherein the pin comprises three parts, the holder, the magnet, and the press-pin.

15. The method according to claim **14** wherein the magnet is a rare-earth neodymium-iron-boron magnet.

16. An apparatus for sensing closure of a latch to a hatch lid comprising:
a lid;
a latch, the latch having an upper section being pivotally connected to the lid at a first location, and the latch having a lower section being in the shape of a claw;
a pin removably connected to the lid at a second location, wherein the claw of the latch engages with the pin to close the lid;
a magnet having magnetization and being embedded in the pin, wherein the magnet is oriented with its magnetic poles parallel to a longitudinal axis of the pin; and
a sensor, the sensor having a housing and a front face; wherein the sensor is mounted within the latch such that the front face of the sensor is juxtaposed to the pin.

17. The apparatus according to claim **16** wherein the sensor is a reed switch, the reed switch positioned perpendicular to the front face of the sensor and to the longitudinal axis of the pin, and wherein a 0 Gauss line of a magnetic field of the magnet is offset with the front face of the sensor and the reed switch.

18. The apparatus according to claim **17** wherein the pin further comprises:
a holder, the holder being cylindrical and having a cavity to insert the magnet;
a press pin, the press pin being cylindrical with knurls on one end and having a nail head;
wherein the press pin is insertable into the holder, securing the magnet, and locking the press pin and the holder together.

19. The apparatus according to claim **17** wherein the sensor is a reed switch, the reed switch positioned parallel to the front face of the sensor and to the longitudinal axis of the pin, and wherein the magnet is in line with the front face of the sensor.

20. The apparatus according to claim **19** wherein the sensor is connected to a flange mount on the latch, the flange mount restricting orientation of the sensor so that the reed switch is parallel to the longitudinal axis of the pin and the poles of the magnet.

21. The apparatus according to claim **16** wherein the sensor is a Hall effect sensor, the Hall effect sensor positioned parallel to the front face of the sensor and to the longitudinal axis of the pin, and wherein a 0 Gauss line of a magnetic field of the magnet is offset from the front face of the sensor and the Hall effect sensor.

22. The apparatus according to claim **21** wherein the sensor further comprises:
a threaded housing, wherein the sensor is threaded into a tapped hole in the latch and tightened.

23. The apparatus according to claim **22** wherein the sensor is further mounted to the latch with thread lock compound.

24. The apparatus according to claim **23** wherein the front face is recessed within the hole in the latch.

25. The apparatus according to claim **24** wherein the magnet is a rare-earth neodymium-iron-boron magnet.

26. The apparatus according to claim **25** wherein the sensor further comprises a wireless transmitter.

27. The apparatus according to claim **16**, further comprising:
a wireless transmitter;
a printed circuit board, wherein the printed circuit board receives a signal indicating a status of the sensor and communicates the status of the sensor to the wireless transmitter; and
wherein the wireless transmitter broadcasts the status of the sensor to a remote location.

28. A method for sensing closure of a latch to a hatch lid, the method comprising:
mounting a sensor in the latch, the sensor having a housing and a front face;
inserting a pin in the lid, the pin containing a magnet having a magnetization and wherein the magnet is oriented with its poles parallel to a longitudinal axis of the pin;
wherein the sensor is positioned within the latch such that the front face of the sensor is juxtaposed to the pin offset from the midpoint between the poles of the magnet and substantially perpendicular to one pole of the magnet;
closing the lid;

engaging the latch to the pin, whereby proximity of the sensor to the magnet indicates closure of the hatch lid, and

communicating closure of the hatch lid by the sensor.

29. The method according to claim **28** wherein the sensor is a reed switch, the reed switch positioned perpendicular to the front face of the sensor and to the longitudinal axis of the pin, and wherein a 0 Gauss line of a magnetic field of the magnet is offset from the front face of the sensor and the reed switch.

30. The method according to claim **29** wherein the step of inserting the pin in the lid further comprises:

inserting the magnet into a holder;

securing the magnet into the holder with a press-pin;

locking the press-pin and the holder together as one unit; and

wherein the pin comprises three parts, the holder, the magnet, and the press-pin.

31. The method according to claim **30** wherein the sensor has external threads, and wherein the step of mounting the sensor further comprises:

drilling a hole in the latch;

tapping the hole; and

threading the sensor into the hole.

32. The method according to claim **31** wherein the step of mounting the sensor further comprises applying thread lock compound to the sensor threads.

33. The method according to claim **32** wherein the front face is recessed within the hole in the latch.

34. The method according to claim **33** wherein the magnet is a rare-earth neodymium-iron-boron magnet.

35. The method according to claim **28** wherein the sensor is a Hall effect sensor, the Hall effect sensor positioned parallel to the front face of the sensor and to the longitudinal axis of the pin, and wherein a 0 Gauss line of a magnetic field of the magnet is offset from the front face of the sensor and the Hall effect sensor.

36. The method according to claim **28** wherein the step of inserting a pin in the lid further comprises:

removing an existing pin from the lid;

drilling an opening in the pin;

embedding a magnet in the pin;

replacing the pin in the lid.

37. The method according to claim **28**, further comprising:

communicating a status of the sensor to a printed circuit board, whereby the status of the sensor is communicated to a wireless transmitter;

broadcasting the status of the sensor from the wireless transmitter to a remote location.

38. A method for use with a latch and a hatch lid lacking any electrical mechanism for sensing closure of the latch to the hatch lid, the method comprising:

mounting a flange mount to the latch, the flange mount comprising:

a sensor, the sensor having a front face;

removing an existing pin from the lid;

inserting a new pin in the lid, the new pin containing a magnet having a magnetization and wherein the magnet is oriented with its poles parallel to a longitudinal axis of the new pin;

wherein the sensor is positioned within the latch such that the front face of the sensor is juxtaposed to the new pin midway between the poles of the magnet and substantially parallel to the magnet;

closing the lid;

engaging the latch to the pin, whereby proximity of the sensor to the magnet indicates closure of the hatch lid, and

communicating closure of the hatch lid by the sensor.

39. The method according to claim **38** wherein the sensor is a reed switch, the reed switch positioned parallel to the front face of the sensor and to the longitudinal axis of the pin, and wherein the magnet is in line with the front face of the sensor.

40. The method according to claim **39** wherein the step of mounting the flange mount further comprises:

drilling a main hole in the latch;

drilling a second hole in the latch, adjacent to the main hole;

tapping the second hole; and

mounting the flange mount to the latch in the main hole and securing the flange mount by a screw in the second hole.

41. The method according to claim **40** wherein the step of inserting the pin in the lid further comprises:

inserting the magnet into a holder;

securing the magnet into the holder with a press-pin;

locking the press-pin and the holder together as one unit; and

wherein the pin comprises three parts, the holder, the magnet, and the press-pin.

42. The method according to claim **41** wherein the magnet is a rare-earth neodymium-iron-boron magnet.

43. An apparatus for sensing closure of a latch to a hatch lid comprising:

a lid;

a latch, the latch having an upper section being pivotally connected to the lid at a first location, and the latch having a lower section being in the shape of a claw;

a pin removably connected to the lid at a second location, wherein the claw of the latch engages with the pin to close the lid;

a magnet having magnetization and being embedded in the pin, wherein the magnet is oriented with its magnetic poles parallel to a longitudinal axis of the pin; and

a sensor, the sensor having a housing and a front face; wherein the sensor is mounted within the latch such that the front face of the sensor is juxtaposed to the pin offset from the midpoint between the poles of the magnet and substantially perpendicular to one pole of the magnet.

44. The apparatus according to claim **43** wherein the sensor is a reed switch, the reed switch positioned perpendicular to the front face of the sensor and to the longitudinal axis of the pin, and wherein a 0 Gauss line of a magnetic field of the magnet is offset with the front face of the sensor and the reed switch.

45. The apparatus according to claim **44** wherein the pin further comprises:

a holder, the holder being cylindrical and having a cavity to insert the magnet;

a press pin, the press pin being cylindrical with knurls on one end and having a nail head;

wherein the press pin is insertable into the holder, securing the magnet, and locking the press pin and the holder together.

46. The apparatus according to claim **44** wherein the sensor is a reed switch, the reed switch positioned parallel to the front face of the sensor and to the longitudinal axis of the pin, and wherein the magnet is in line with the front face of the sensor.

47. The apparatus according to claim **46** wherein the sensor is connected to a flange mount on the latch, the flange mount restricting orientation of the sensor so that the reed switch is parallel to the longitudinal axis of the pin and the poles of the magnet.

48. The apparatus according to claim **43** wherein the sensor is a Hall effect sensor, the Hall effect sensor positioned parallel to the front face of the sensor and to the longitudinal axis of the pin, and wherein a 0 Gauss line of a magnetic field of the magnet is offset from the front face of the sensor and the Hall effect sensor.

49. The apparatus according to claim **48** wherein the sensor further comprises:

a threaded housing, wherein the sensor is threaded into a tapped hole in the latch and tightened.

50. The apparatus according to claim **49** wherein the sensor is further mounted to the latch with thread lock compound.

51. The apparatus according to claim **20** wherein the front face is recessed within the hole in the latch.

52. The apparatus according to claim **21** wherein the magnet is a rare-earth neodymium-iron-boron magnet.

53. The apparatus according to claim **22** wherein the sensor further comprises a wireless transmitter.

54. The apparatus according to claim **43**, further comprising:

a wireless transmitter;

a printed circuit board, wherein the printed circuit board receives a signal indicating a status of the sensor and communicates the status of the sensor to the wireless transmitter; and

wherein the wireless transmitter broadcasts the status of the sensor to a remote location.

* * * * *