US006302262B1

(12) **United States Patent**
Maeder

(10) **Patent No.: US 6,302,262 B1**
(45) **Date of Patent: Oct. 16, 2001**

(54) **METHOD AND DEVICE FOR CONVEYING INDIVIDUALLY HELD PRODUCTS**

(75) Inventor: **Carl Maeder**, Hinwil (CH)

(73) Assignee: **Ferag Ag**, Hinwill (CH)

(*) Notice: Subject to any disclaimer, the term of this patent is extended or adjusted under 35 U.S.C. 154(b) by 0 days.

(21) Appl. No.: **09/319,855**

(22) PCT Filed: **Nov. 26, 1997**

(86) PCT No.: **PCT/CH97/00444**

§ 371 Date: **Aug. 13, 1999**

§ 102(e) Date: **Aug. 13, 1999**

(87) PCT Pub. No.: **WO98/25845**

PCT Pub. Date: **Jun. 18, 1998**

(30) **Foreign Application Priority Data**

Dec. 13, 1996 (CH) 3069/96

(51) **Int. Cl.**[7] **B65G 47/84**

(52) **U.S. Cl.** **198/465.4**; 198/687.1

(58) **Field of Search** 198/465.1, 465.2, 198/465.4, 687.1, 867.02, 867.03, 867.14, 867.15

(56) **References Cited**

U.S. PATENT DOCUMENTS

3,006,453	*	10/1961	Tonelli	198/465.4
3,204,756	*	9/1965	Lesch	198/465.1
4,465,417	*	8/1984	Baumann et al.	198/465.4
4,638,906		1/1987	Winiasz .	
4,917,227	*	4/1990	Matsuo et al.	198/465.1
5,769,949	*	6/1998	Cienkus et al.	198/465.4
5,893,447	*	4/1999	Brintazzoli	198/465.1
5,927,471		7/1999	Neef et al. .	
6,007,064	*	12/1999	Cote et al.	198/465.4

FOREIGN PATENT DOCUMENTS

23 40827 A1	3/1975	(DE) .
195 32 281 A1	3/1997	(DE) .
198 00 630 A1	7/1999	(DE) .
0 399 188	11/1990	(EP) .
0 391 467 B1	6/1993	(EP) .
966402	8/1964	(GB) .
2 285 426 A	7/1995	(GB) .
WO 94/00372 A1	1/1994	(WO) .

* cited by examiner

Primary Examiner—Joseph E. Valenza
(74) *Attorney, Agent, or Firm*—Oppedahl & Larson LLP

(57) **ABSTRACT**

For conveying individually held products **(3)** in a network of conveying paths. (A, B), a holding element **(4)** is associated with each product **(3)** and is conveyed together with the product along the entire conveying route for the product **(3)** which route contains various conveying paths (A, B). Each holding element **(4)** comprises at least one first coupling part **(1)** for being coupled to a conveying element being movable along a given conveying path (A, B) and comprising a second coupling parts **(2)** or for being coupled to guides extending along the conveying paths. In transfer areas (U) in which products and holding means are transferred from one conveying path to another conveying path control means are provided for uncoupling holding elements **(4)** from conveying elements or guides of a first conveying path (A) and for coupling holding elements **(4)** to conveying elements or guides of a second conveying path (B).

20 Claims, 9 Drawing Sheets

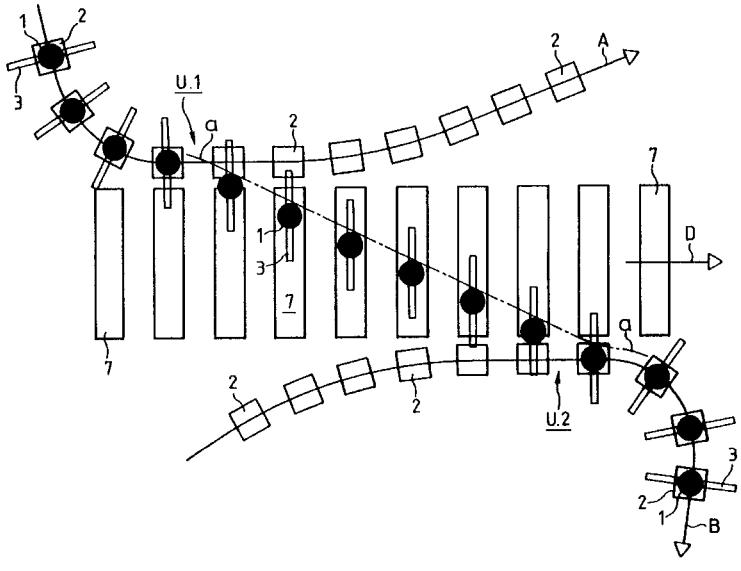

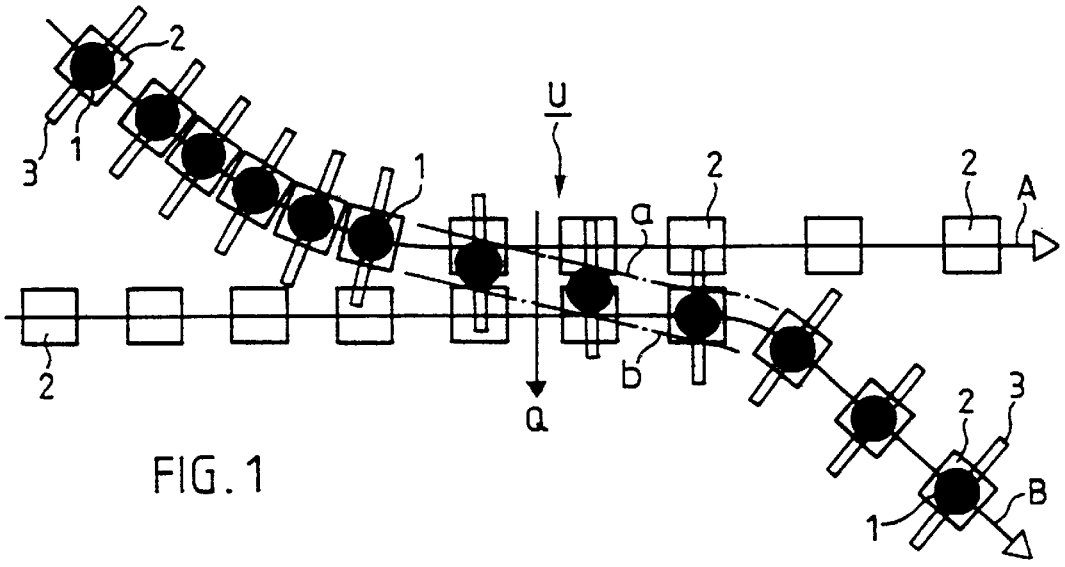

FIG. 1

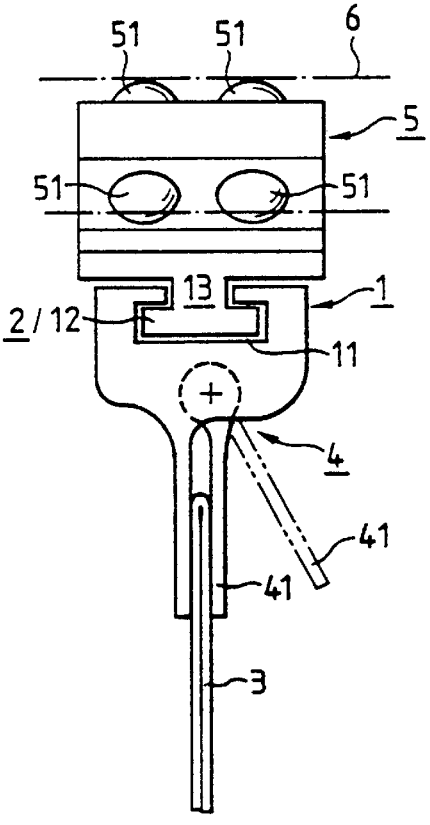

FIG. 2

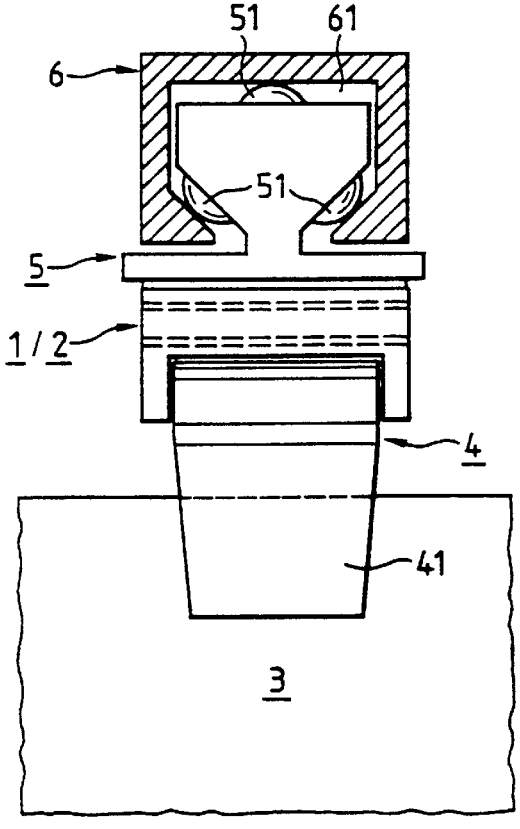

FIG. 3

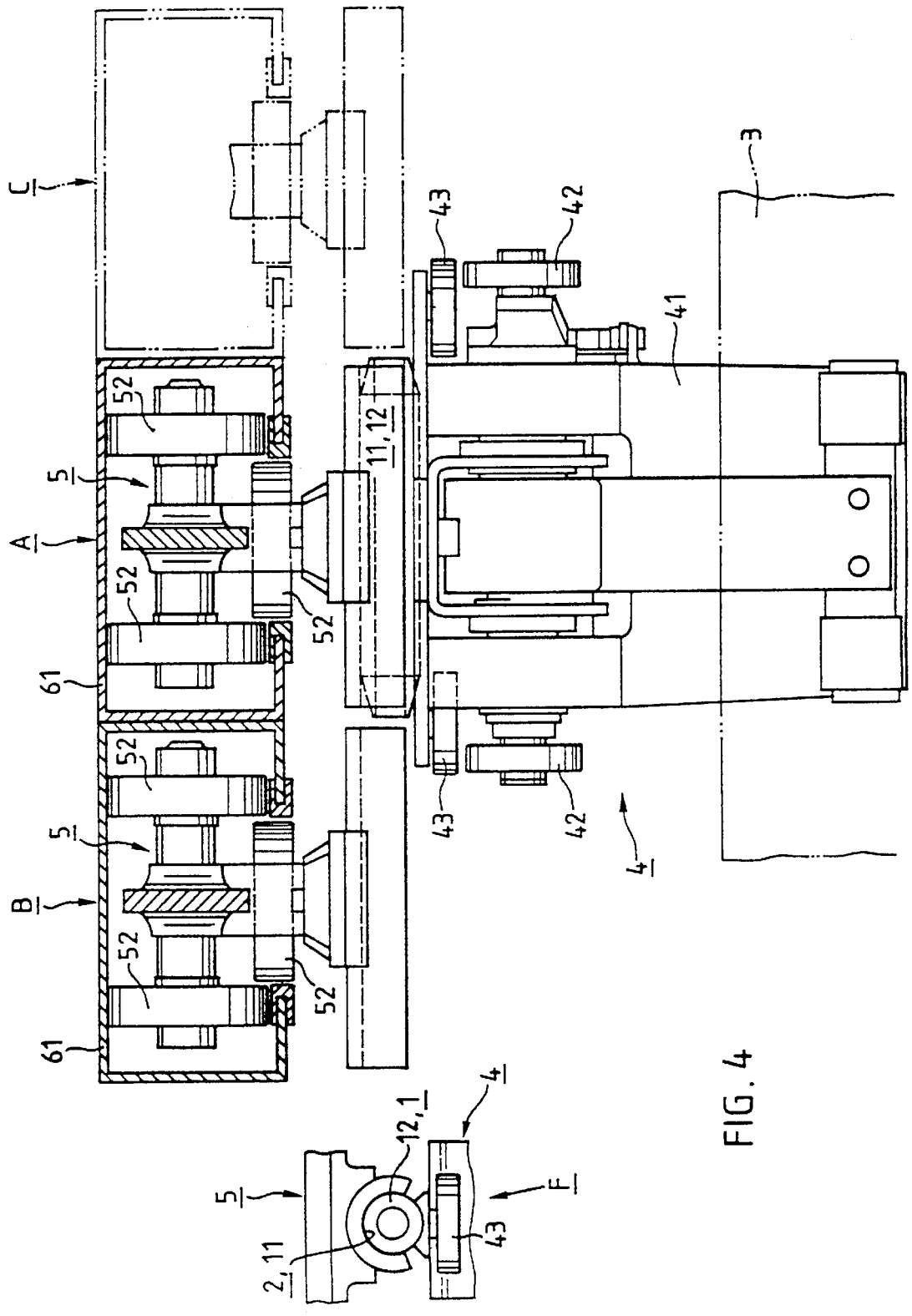

FIG. 4

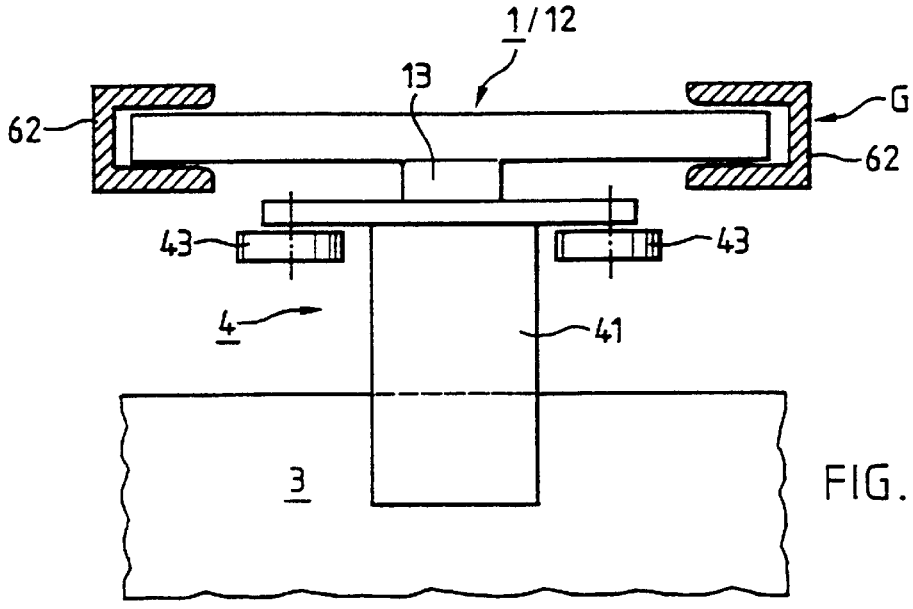

FIG. 5

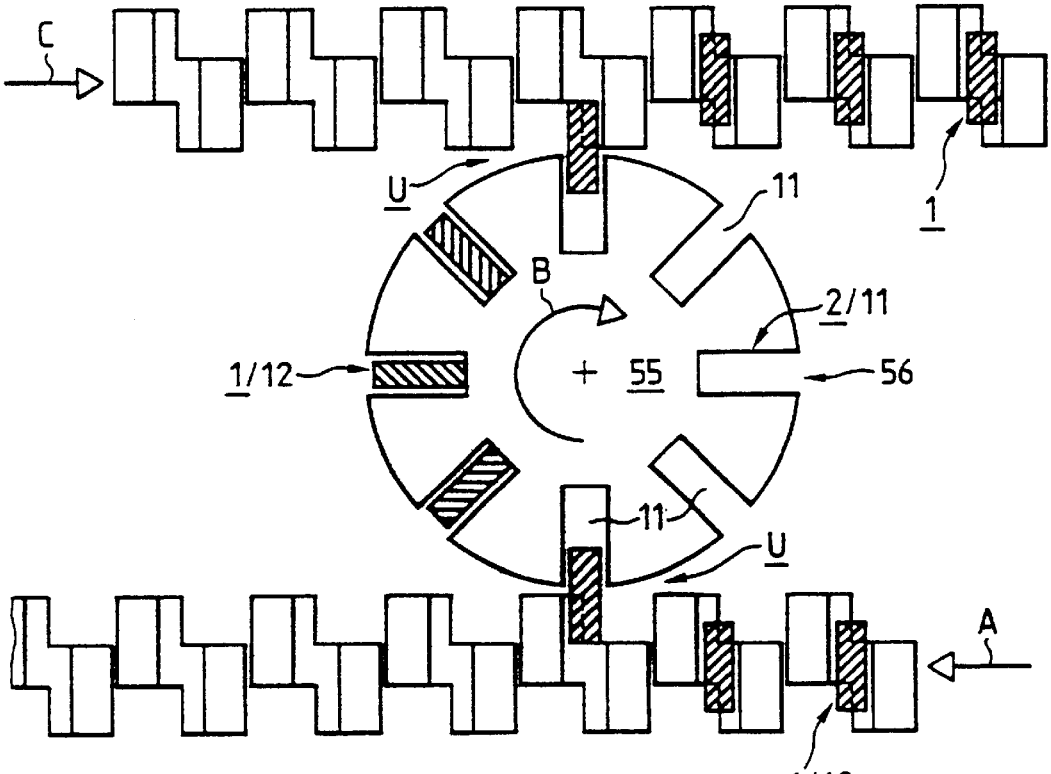

FIG. 7

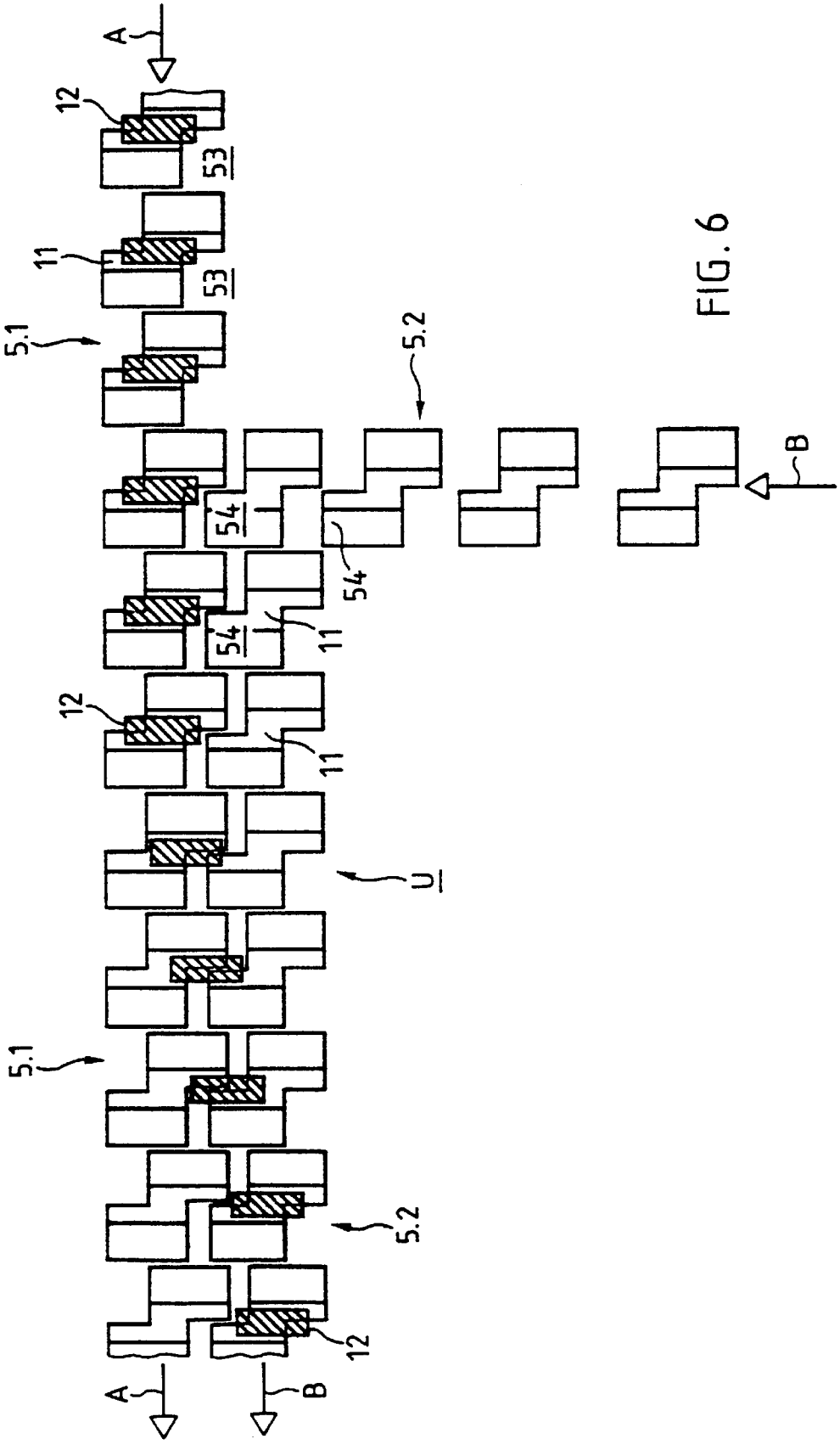

FIG. 6

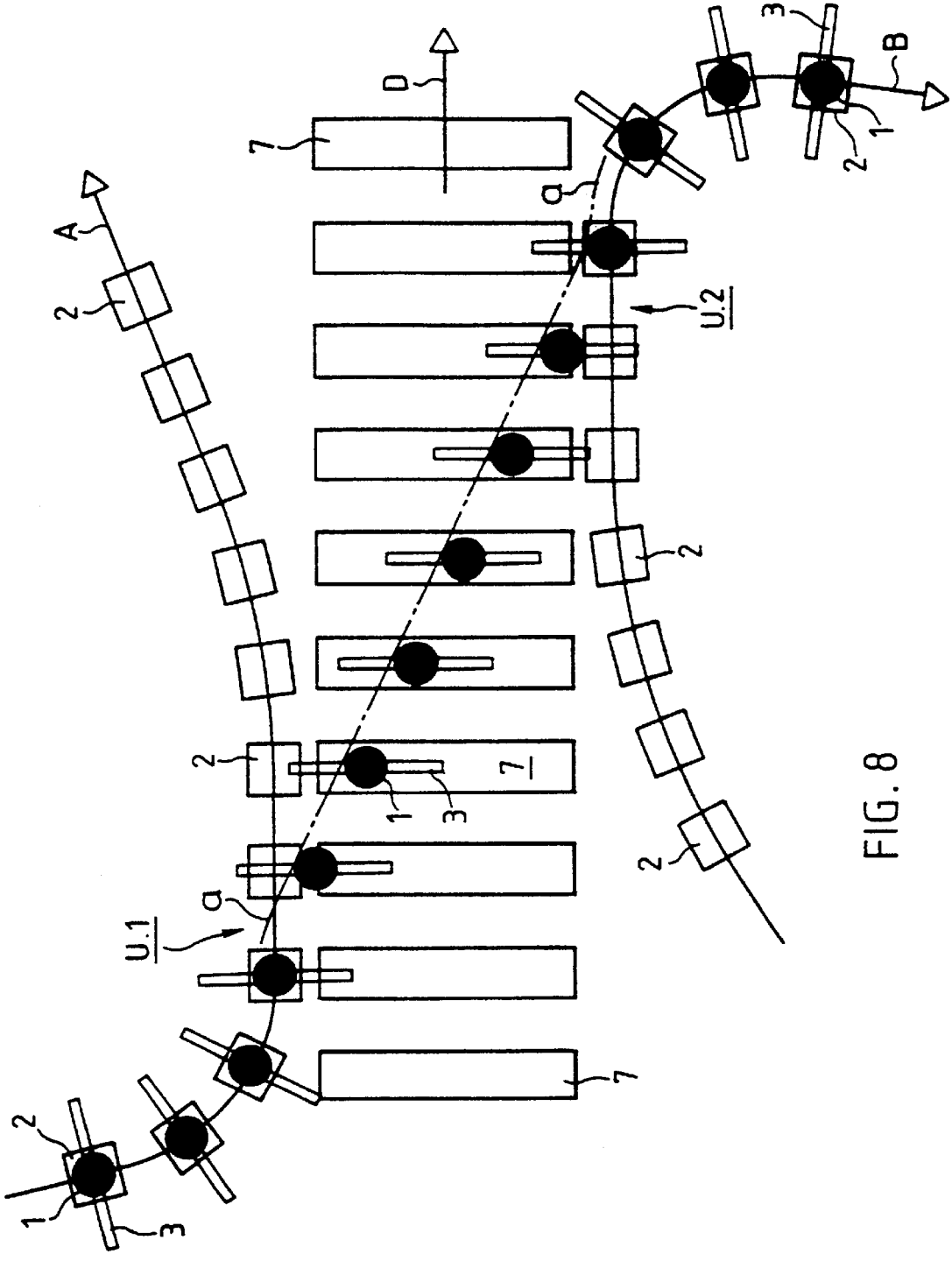

FIG. 8

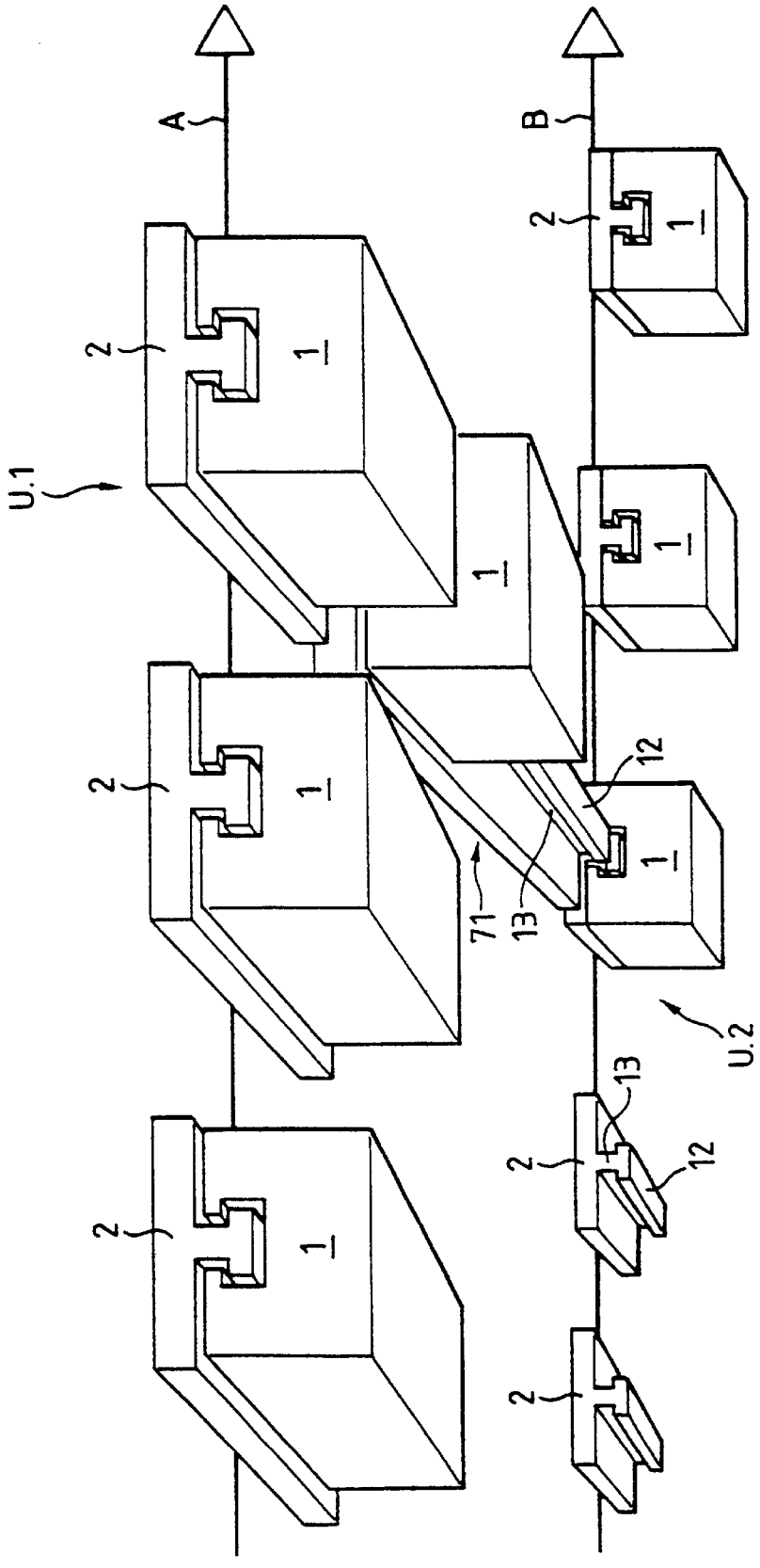

FIG. 9

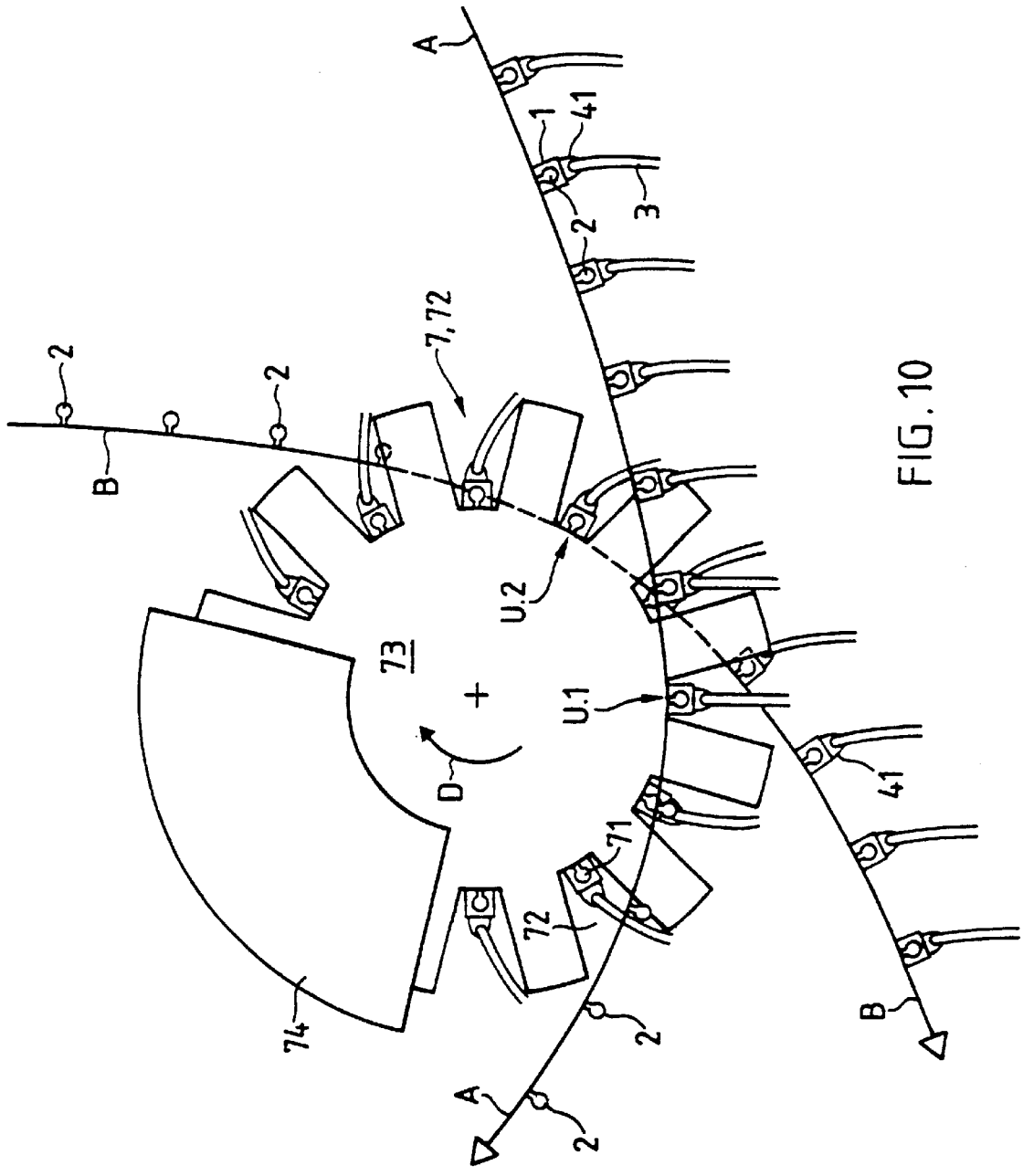

FIG. 10

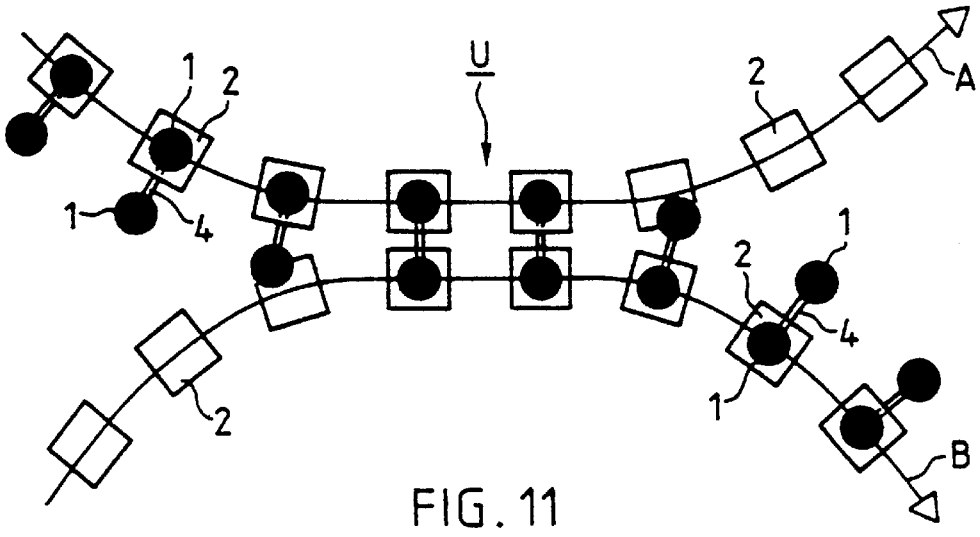

FIG. 11

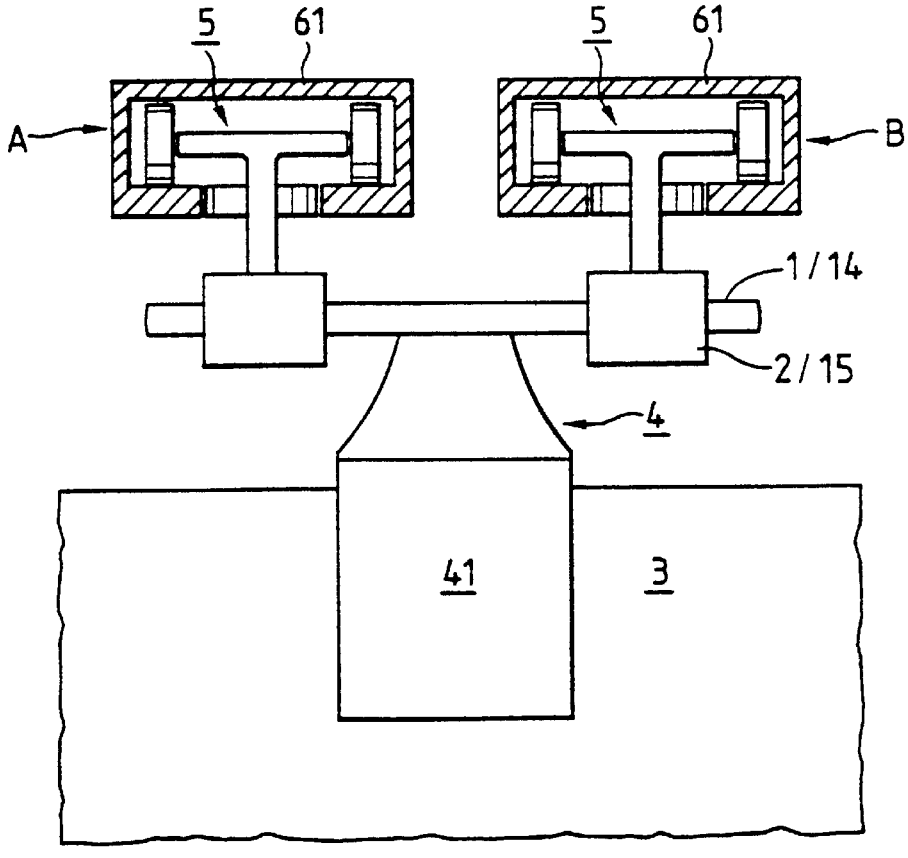

FIG. 12

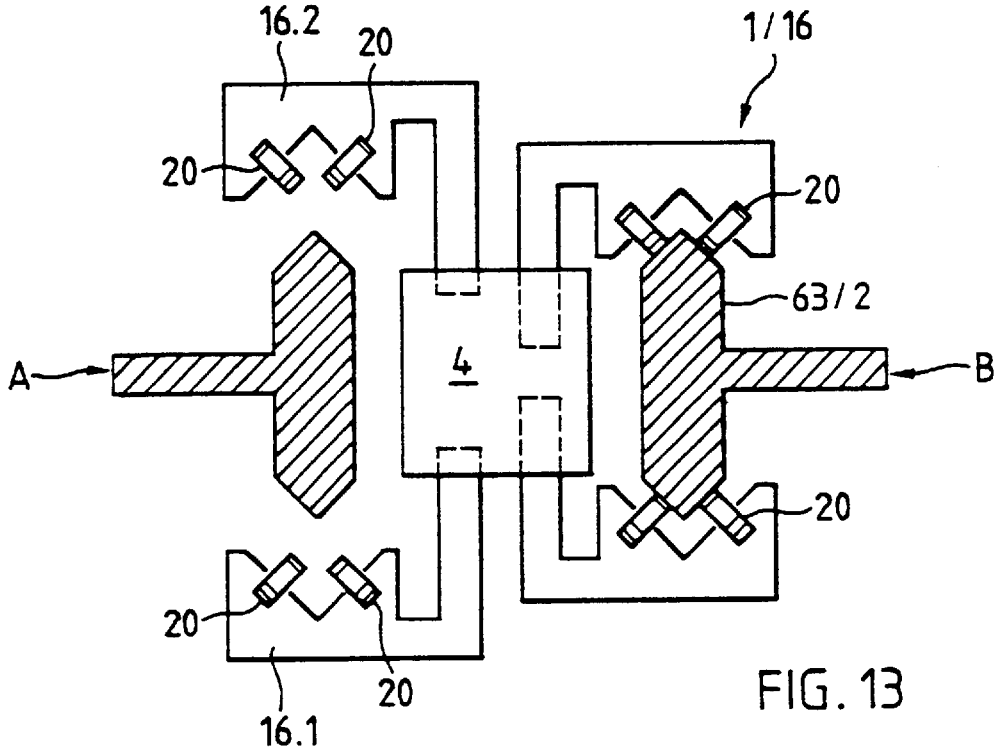
16.2
20
1/16
20
20
63/2
A
4
B
20
20
20
16.1

FIG. 13

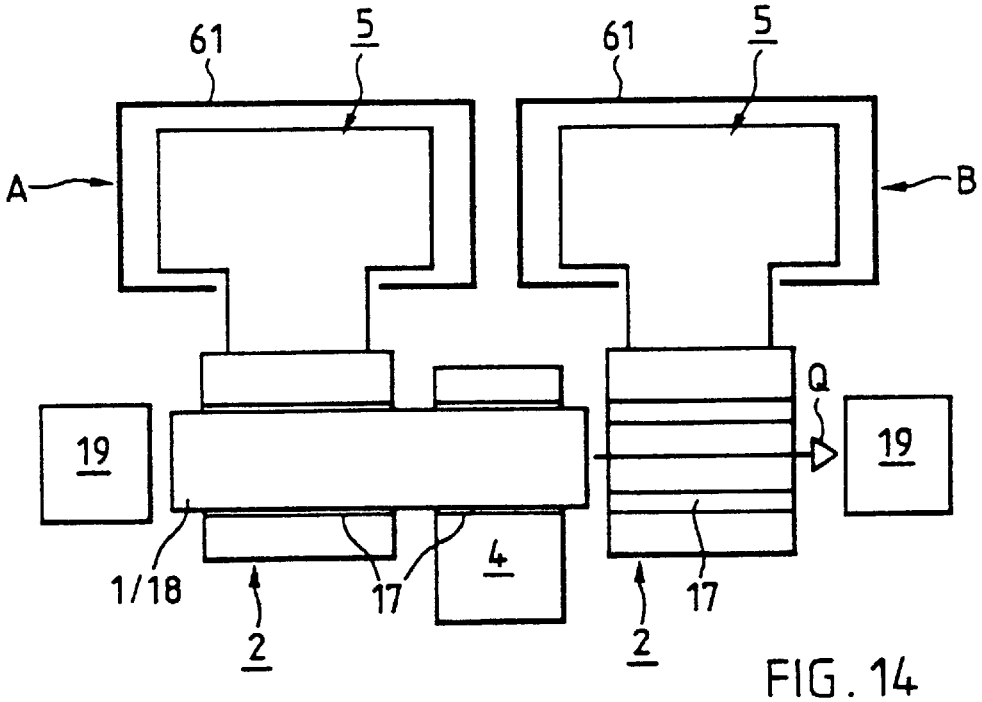
61
5
61
5
A
B
Q
19
19
1/18
17
4
17
2
2

FIG. 14

METHOD AND DEVICE FOR CONVEYING INDIVIDUALLY HELD PRODUCTS

The invention is in the field of conveying technology and relates to a method for conveying individually held products, as well as to an arrangement for performing the method.

BACKGROUND

The products to be considered hereinafter are held individually and are conveyed substantially continuously through a network of conveying paths on optionally individual routes. By this conveying operation the products are e.g. brought from a manufacturing process to stations in which they are individually further processed, or they are conveyed from one processing station to another or through processing stations in which they are processed during continuous conveyance. An example for products to be handled in this way are printed products which, coming from the printing press, are further processed and rendered ready for dispatch by the most varied processing stations.

It is known to individually convey printed products, in that each of the products is held by a gripper or some other suitable holding means. For this purpose e.g. a plurality of grippers or holding means are fixed to a transport chain and the chain is driven and guided in such a way that the products held by the grippers or holding means are conveyed in a predetermined manner over a predetermined conveying path. At points where all or individual products of such a product stream are to be passed from a first to a second conveying path, the two conveying paths are arranged relative to one another in such a way that the products can be taken over by the holding means of the second conveying path and can be released by the holding means of the first conveying path, normally without interruption of the continuous conveyance. For such operation, at the transfer point, control means are provided for both the participating conveying paths, the control means controlling activation of all or individual ones of the holding means (bringing them into a holding configuration) or deactivation (bringing them from the holding configuration into a non-holding configuration).

Also known are arrangements in which the holding means being movable along a conveying path are interconnected such that the spacings between them are variable. In the same manner as described above, transfer points of such arrangements are equipped with control means for activating or deactivating the holding means and such arrangements additionally comprise means for synchronizing the releasing and the taking-over holding means.

The above-described arrangements for conveying articles are particularly suitable for product streams, which are conveyed over longer conveying paths with a substantially unchanged product sequence. The arrangements are robust and easily operable even for very high conveying capacities and it is possible to implement the return of the holding means on a simple return path without any specific control.

However, if the products to be conveyed are easily mechanically damaged and have only a limited inherent stability, complicated guidance means have to be provided at the transfer points to ensure that the products are not damaged on being transferred aid it is important to very precisely synchronize the movements of releasing holding means and of the taking-over holding means at the transfer point. Thereby, the guidance means and the synchronization must be adapted to each product type to be conveyed

(product format). For there reasons conveying systems of this type are advantageously designed with a minimum number of transfer points.

Conveying systems comprising independent, i.e. non-interconnected holding means which are movable along conveying paths are known also. Such arrangements are particularly suitable for conveying methods with product-specific conveying routes whereby for guiding the movement of the holding means guidance systems with branching points and return points are provided, the witch points being controllable in a product-dependent manner. Such conveying systems can be operated in a very flexible manner, but tend to be complicated regarding control and driving means. Controllable guidance systems must also be provided for the return of the holding means.

The object of the invention is to provide a method for conveying individually held products whereby the method is to combine the advantages of the above-described systems, but largely eliminating their disadvantages. In particular, the method is to be substantially independent of shape variations with respect to the products to be conveyed. The method is to be usable for very high conveying capacities and is to be better adaptable than known methods of the same type to the most varied conveying functions in different areas through which the products are to be conveyed. A further object of the invention is to provide an arrangement for carrying out the method, said arrangement being easily adaptable to the most varied, local conveying functions and also easily extendable.

SUMMARY OF THE INVENTION

The inventive method is based on associating a holding element with each product to be conveyed, the holding element holding the product in a clearly defined manner and covering together with the product the entire conveying route intended for the product, said route comprising a series of conveying paths. For conveying, the holding elements are coupled to parts movable along a specific conveying path or to guides extending along a specific conveying path.

A network of clearly defined conveying paths is provided, together with a plurality of holding elements. Each of the holding elements has at least one first coupling part, with the aid of which it can be coupled to a second coupling part, each second coupling part being associated with a specific conveying path and being movable along this path. According to another method variant, the holding elements are coupled to guides extending along a conveying path with the aid of the first coupling parts.

For conveying it along a conveying path, a product is held by a holding element and the holding element is coupled to a second coupling part with the aid of the first coupling part, the second coupling part being movable along the conveying path. It is possible also to couple the holding element with the aid of the first coupling part to a guide extending along the conveying path. The coupling part, the conveying element on which the coupling part is located, or the holding element is driven along the conveying path by suitable means. In transfer areas, i.e. at points where the product is passed from one conveying path to anther conveying path, the holding element is uncoupled from the second coupling part movable on the first conveying path or from the corresponding guide and it is coupled to a second coupling part movable on the second conveying path or to a corresponding guide, thereby of a stream of products either all products are transferred or specific products only.

The advantage of the inventive method is the fact that the products to be conveyed have to be gripped or grasped only

once. This significantly reduces the damage risk and renders the method substantially independent of the precise product shape. In addition, the second coupling parts movable on the conveying paths are movable in very different ways depending on the conveying function of a specific conveying path within a given network of conveying paths. The second coupling parts can e.g. be arranged equidistantly on conveying chains. If holding elements are coupled to such a conveying chain, their function corresponds to a known conveying chain of the type described hereinbefore. The second coupling parts can also be positioned on links of chains having variable link spacings or they can be arranged on completely independently movable conveying elements. Corresponding drive means can be designed and positioned depending on the nature of the movement of the second coupling parts along a specific conveying path.

In addition to the conveying paths with second coupling parts movable thereon, in an arrangement according to the invention there may also be conveying paths on which the holding elements can be moved without coupling, e.g. in that their first coupling parts slide in correspondingly designed guides, e.g. being driven by the force of gravity. Such additional conveying paths are particularly suitable for non-continuous conveying, e.g. for buffer paths and return paths.

A further advantage of the method and arrangement according to the invention is the fact that in processes in which it is advantageous to individually identify the products, suitable identification means do not have to be located on the actual products, but instead can be carried by the holding elements and therefore, do not leave the conveying system. Such identification means are e.g. electronic units which are writable and readable without contact.

DESCRIPTION OF THE DRAWING

A number of exemplified embodiments of the method and arrangement according to the invention and of embodiments of parts thereof are described in greater detail in connection with the attached Figures, wherein:

FIG. **1** shows a transfer area as an illustration of a first, exemplified embodiment of the inventive method variant;

FIGS. **2** to **4** show exemplified holding elements for being used in the embodiment of the inventove method according to FIG. **1**, the elements comprising first coupling parts cooperating with second coupling parts;

FIG. **5** shows an example of an additional conveying path for holding elements according to FIG. **4**;

FIG. **6** shows as an example the synchronization of conveying means in a transfer area;

FIGS. **7** to **10** show further transfer areas operated according to the embodiment of the inventive method as shown in FIG. **1**;

FIG. **11** shows a transfer area operated according to a further exemplified embodiment of the inventive method;

FIGS. **12** & **13** show examples of holding elements with first coupling parts and corresponding, second coupling parts to be used in the embodiment of the inventive method as shown in FIG. **11**;

FIG. **14** shows a transfer area operated according to a further embodiment of the inventive method.

DETAILED DESCRIPTION OF THE INVENTION

FIG. **1** illustrates a first, exemplified embodiment of the inventive method by showing in a schematic manner a very limited network having only two conveying paths A and B which are shown in a transfer area U and its immediate vicinity. The two conveying paths are diagrammatically represented by arrowed lines (conveying directions). Second coupling parts **2** are movable on the two conveying paths and are diagrammatically represented as white squares. First coupling parts **1** are diagrammatically represented as black circles. In each case one first coupling part **1** is located on a not shown holding element, which holds a product **3**. The product is e.g. a printed product, i.e. a newspaper, magazine, brochure or intermediate product for one of the aforementioned products. FIG. **1** shows the bound or folded backs of the products.

The representation of FIG. **1** can be understood as a birds eye view, i.e. the conveying paths A and B, the coupling parts **1** and **2** and the holding elements are arranged above the products **3** which are conveyed in suspended manner. However, the representation can equally well be understood as a side view, i.e. the products **3** are held laterally, the conveying path A arriving from above and the conveying path B passing away downwards. Mixed forms can also be easily conceived.

On the conveying path B the second coupling parts **2** having constant mutual spacings are moved e.g. arranged on articulated interconnected chain links. On the conveying path A the second coupling parts **2** do not have constant mutual spacings, i.e. they are for example placed on loosely interconnected conveying elements or on individual conveying elements. For this reason, for the transfer area U synchronizing means (not shown) must be provided for synchronizing the second coupling parts **2** on the conveying path A with the second coupling parts **2** on the conveying path B at least in the transfer area U or for clocking the second coupling parts of the conveying path A into the transfer area. For transferring holding elements from a chain with equidistant chain links to another chain having links with the same spacings, the two chain drives must be correspondingly synchronized.

On the supply side (to the left of FIG. **1**) to the transfer area U, the holding elements with the first coupling parts **1** are coupled to the second coupling parts **2** movable on the conveying path A. In the transfer area, in which the second coupling, parts **2** of the two conveying paths A and B are moved in parallel and synchronized with one another, each first coupling part **1** is uncoupled from the corresponding, second coupling part **2** of the conveying path A, is moved at right angles to the conveying direction (arrow Q) and is coupled to a second coupling part **2** of the conveying path B. On the conveying away side (to the right in FIG. **1**) from the transfer area U, the holding elements and first coupling parts **1** are coupled to second coupling parts **2** on the conveying path B and are conveyed away thereon.

Besides synchronizing means for synchronization of the second coupling parts **2** of the two conveying paths A and B, the transfer area U needs means for moving the holding elements and first coupling parts **1** at right angles to the conveying direction (arrow Q), e.g. corresponding cams, as indicated by the dot-dash lines a and b. For a specific transfer, in which only specific and not all the holding elements with products are to be transferred, the means for the transverse movement must be made correspondingly controllable. In corresponding arrangements gravity can also be used as a transverse movement means.

Advantageously, there are also locking means for locking in each case two coupled coupling parts **1** and **2** together. Corresponding control means must be provided in the transfer area U for activating or deactivating the locking means.

FIGS. **2** and **3** show an exemplified embodiment of a holding element with a first coupling part **1** and of a conveying element **5** being movable in a guide **6** (clearly defined conveying path) and on which is located a second coupling part **2**. The holding element **4** and the conveying element **5** are shown in FIG. **2** in a viewing direction at light angles to the conveying direction and in FIG. **3** with a viewing direction parallel to the conveying direction. Holding elements **4** and conveying elements **5** equipped according to FIGS. **2** and **3** are suitable for the embodiment of the inventive method according to FIG. **1**.

The pair of cooperating coupling parts 1/2 shown in FIGS. **2** and **3** comprises a part with a groove **11** narrowing towards the outside and a comb **12** having a narrowed neck area **13**. Groove **11** and comb **12** have cross-sections matched to one another and are oriented substantially at right angles to the conveying direction at least in a taking over area, such that the comb **12** can be moved out of the groove **11** at about right angles to the conveying direction. In the represented embodiment the groove **11** is located on the holding element **4** and the comb **12** on the conveying element **5**, but this arrangement can obviously be reversed.

The holding element **4** e.g. comprises a gripper **41** for gripping and holding a printed product **3**. Such grippers are generally known, e.g. from the publications CH-569197 or U.S. Pat. No. 3,948,551. The conveying element **5** e.g. comprises two groups of in each case three balls, with the aid of which it rolls in a corresponding guide channel **61**. Such conveying elements **5** are described in the publication EP-387318 or U.S. Pat. No. 5,074,678.

In a transfer- area, two guide channels **61** extend parallel to one another and the conveying elements **5** are synchronized in such a way that they are conveyed in pairs of conveying elements with aligned combs **12** through the transfer area. In the transfer areas the spacing between the guide channels **61** is such that the spacing between the aligned combs **12** of two synchronously moved conveying elements **5** is smaller than the length of a groove **11** of a holding element **4**. Using suitable means, the holding element **4** positioned in comb **12** out of one conveying element can be moved onto the aligned comb **12** of the other conveying element **5**. Such means for transverse movement are either designed for moving all the holding elements conveyed through the transfer area or for moving specific ones of them in a controlled manner. These means are e.g. cams or magnetic systems being particularly suitable as controlled movement means.

FIG. **4** shows a further embodiment of a transfer area with three conveying paths A, B and C, viewed parallel to the conveying direction. It illustrates a further embodiment of holding elements **4** and conveying elements **5**, which can be coupled together via, a pair of coupling parts **1** and **2**. The holding element **4** once again has a gripper **41** for gripping and holding a product **3**. The gripper **41** is activated (for gripping) or deactivated (for releasing) by means of control rollers **42**. The conveying element **5** is a link of a link chain and rolls on rollers **52** in a guide channel **61**.

As the first coupling part **1**, a comb **12** is provided on the holding element **4** and as the second coupling part **2**, a groove **11** is provided on the conveying element **5** (coupling parts interchanged compared with the embodiment of FIGS. **2** and **3**). As can be gathered from the detail view F (at right angles to the conveying direction), said groove **11** comprises a tubular segment and the head part of the comb **12** comprises a tube, whose external diameter is matched to the internal diameter of the tubular segment.

The holding element **4** also has control rollers **43**, which roll on correspondingly positioned, cams (not shown) for moving the comb **12** from the groove **11** of one conveying element **5** into the groove of another conveying element.

FIG. **5** shows a holding element **4** being movable along an additional conveying path G without second coupling parts. The holding element **4** essentially corresponds to the holding element of FIG. **4** and is equipped with control rollers **43** and with a comb **12** constituting the first coupling part **1**. The comb **12** used for coupling to a second coupling part has a neck area **13**, which only extends over a central portion of the comb length, such that the lateral areas of the comb **12** are free tube ends. With said free tube ends, the holding element **4** car, be bilaterally guided in sliding manner in corresponding, e.g. U-shaped guide rails **62** representing a further conveying path (e.g. buffer path) of an inventive conveying arrangement. A return path for empty holding elements can also be implemented in such a way, the holding elements advantageously being driven by gravity or by other, eg. impacting drive means.

FIG. **6** diagrammatically shows a further transfer area U with two conveying paths A and B. In said transfer area once again holding elements, whereof only the first coupling parts in the form of combs **12** are shown, are displaceable in corresponding grooves **11** of conveying elements **5.1** belonging to conveying path A and in grooves **11** of conveying elements **5.2** belonging to conveying path B. The grooves **11** and the combs **12** are oriented substantially at right angles to the conveying direction, at least in the transfer area U.

The conveying elements **5.1** being movable on the conveying path A are interconnected to form a chain, so that their spacings are invariable. The conveying elements **5.2** are free, i.e. non-interconnected elements. The conveying, elements **5.1** and **5.3**. are designed for self-synchronization. For this purpose the chain of the conveying elements **5.1** has concave docking points **53** between the conveying elements. Into the concave docking points **53** fit convex docking points **54** of the conveying elements **5.2**. The free conveying elements **5.2** are now guided against the chain of conveying elements **5.1** in such a way that in each case a convex docking point **54** of a free conveying element **5.2** is docked by a positive engagement in a concave docking point **53** between two linked conveying elements **5.1**. Docked in this way, the free conveying elements **5.2** are conveyed via the linked and driven conveying elements **5.1** at least through the transfer area U, whereby holding elements e.g. of the linked conveying elements **5.1** are pushed onto the free conveying elements **5.2**, as shown in FIG. **6**.

FIG. **7** illustrates a further example of an arrangement for carrying out the embodiment of the inventive method according to FIG. **1**. It shows part of a network of conveying paths, which part comprises parts of three conveying paths A, B and C in two transfer areas U. The conveying elements of the conveying paths A and C correspond to the conveying elements described in conjunction with FIG. **6**. The conveying elements of conveying path B are cells **56** located on a rotary wheel **55** and comprise for second coupling parts **2** e.g. a groove **11** into which first coupling parts **1**, e.g. combs **12** are inserted.

FIG. **8** shows a further embodiment of a transfer area, which is operated substantially in accordance with the embodiment of the inventive method as shown in FIG. **1**. Once again there are two conveying paths A and B on which second coupling parts **2** (white squares) are movable. Between the two conveying paths A and B are provided a

plurality of transverse conveying elements **7** (diagrammatically represented by white rectangles). which are movable in synchronization with the conveying elements of conveying paths A and B along a third conveying path D. In a first transfer U.**1**, the holding elements (only first coupling parts **1** shown as black circles) with the products **3** are in each case transferred to a transverse conveying element **7** by uncoupling the first coupling part **1** of the holding element from the coupling part **2** of the conveying path A and by pushing the holding element onto the transverse conveying clement **7**. The transverse conveying element **7** differs from the conveying element in that, in place of a second coupling part **2**, it has a guide. The first coupling part **1** of the holding element is positionable on this guide by being pushed substantially at right angles to the general conveying direction.

On the other side of the transverse conveying element **7** the first coupling part **1** of the holding element is coupled in a second transfer U.**2** to a second coupling part **2** of the conveying path B and is conveyed away along the conveying path B.

The drive for the transverse conveying within the transverse conveying element **7** can be a cam (diagrammatically represented by the dot-dash line a), which can also control the two transfers U.**1** and U.**2**. It is also conceivable for the transverse conveying element **7** to be equipped with their own, corresponding drive means for the transverse conveying of the holding elements. As shown in FIG. **8**, the conveying of holding means and products in the transverse conveying element **7** can be continuous or contain stops.

FIG. **9** shows in a three-dimensional representation the same transfer area as shown in FIG. **8**. Only first coupling parts **1**, second coupling parts **2** of conveying paths A and B and a transverse guide **71** of a transverse conveying element are shown. The coupling parts **1** and **2** correspond to the coupling parts shown in FIGS. **2** and **3**. The transverse guide **71** of the transverse conveying element is essentially a comb **12** with a narrowed neck area **13** having the same cross-section as the comb **12** of the second coupling part **2**, but is normally longer than the latter.

FIG. **10** diagrammatically shows an application of the transfer area with transverse conveying, as has already been described in conjunction with FIGS. **8** and **9**. The transverse conveying elements **7** are in this case axially running compartments **72** of a processing drum **73**. The product-supplying conveying path A, the drum **73** and the product-removing conveying path B are positioned behind each other along a line at right angles to the paper plane of FIG. **10**, so that the transverse conveying is substantially perpendicular to the paper plane and the first transfer U.**1** is performed in a front, axial area of the drum **73** and the second transfers U.**2** in a rear, axial area of the drum.

The products **3**, held by grippers **41**, coupled by means of first coupling parts **1** to second coupling parts **2**, are conveyed along the conveying path A. In at first transfer U.**1** on one face of the drum **73**, the first coupling parts **1** are uncoupled from the second coupling parts **2** and the products, with holding elements (grippers **41** and first coupling part **1**) are pushed into in each case one compartment **72** of the drum **73** or each first coupling part **1** is pushed onto a transverse guide **71**, which is located on the base of each compartment **72**. During the rotation of the drum (arrow D), the holding elements are e.g. moved in the axial direction of the drum **73** along the transverse guide **71** and the products **3** are e.g. conveyed through and processed in a processing station **74**.

Then, in a second transfer U.**2** on the other face of the drum **73**, the processed products, held by the grippers **41** are coupled by means of the first coupling parts **1** to second coupling parts of the conveying path B and are conveyed away.

Arrangements like the one shown in FIG. **10**, in which the products are processed during transverse conveying, are also conceivable with rotary systems or other similar means in place of the drum **73**.

FIG. **11** illustrates a further, exemplified embodiment of the inventive method by showing a transfer area U with two conveying paths A and B. This embodiment differs from the one shown in FIGS. **1** and **8** in that the holding elements **4** have in each case at least two, first coupling parts **1** and for conveying purposes one of the first coupling parts is coupled to one second coupling part. As can be seen in FIG. **11**, using such a method there is no need for a transverse movement Q of the holding elements **4** on transfer.

However, if there is to be a transverse conveying, e.g. for processing in accordance with FIGS. **8** to **10**, the holding elements must be additionally equipped with the coupling parts necessary for transverse conveying, i.e. holding elements must be designed in such a way that they can be used both according to the first embodiment of the inventive method (FIG. **1**) and according to the second embodiment (FIG. **11**).

FIG. **12** shows in a viewing direction parallel to the conveying direction a transfer area in which, according to the second embodiment of the inventive method (FIG. **11**), holding elements **4** with products **3** are transferred from a conveying path A to a conveying path **13** or vice versa.

The first coupling parts **1**, whereof each holding element **4** has two, are connecting pieces **14**, arranged on the holding element **4** and oriented in opposing directions. The second coupling parts **2** arranged on conveying elements **5** being movable along the conveying paths are coupling grippers **15** designed for gripping the connecting pieces **14**.

In the transfer area there are control means for activating or deactivating the coupling grippers **15**. The expert knows grippers for holding products and control means for activating or deactivating such grippers. Such grippers have to be correspondingly adapted for functioning as second coupling parts **2** (coupling grippers).

In place of connecting pieces **14** and coupling grippers **15**, the first coupling parts **1** and the second coupling parts **2** for the embodiment of the inventive method according to FIG. **11** can be constituted by the most varied, known coupling parts which are correspondingly controllable in a transfer area.

FIG. **13** shows a further embodiment of first and second coupling parts for the embodiment of the inventive method according to FIG. **11**. Once again, the Figure shows a transfer area with two conveying paths A and B (viewed parallel to the conveying direction) being each defined by a guide **63** extending along the conveying path. The first coupling parts **1** of the holding elements **4** are runners, which can be coupled to the guide rail and slide or roll thereon. The guide **63** not only defines the conveying path, but simultaneously constitutes a second coupling part **2** for each holding element **4** to be conveyed along the conveying path. At each point of the conveying path a different area of the guide serves as the second coupling part and consequently the coupling is movable along the conveying path.

Each holding element **4** has two, first coupling parts **1** in the form of runners **16** couplable to the guide **63**. In the represented case the runners **16** comprise two runner parts

16.1 and 16.2, which can be brought into a state closed around the guide 63 and into an open state, using suitable control means and optionally resetting means. The runners 16 roll, e.g. as shown, on rollers 20 on the guide 63 or they slide thereon.

For further embodiments it is possible that the guide 63 is simultaneously a drive means, i.e. is moved along the conveying path. In such a case, the first coupling parts 1 are constructed not as runners, but as clamping parts, with the aid of which the holding elements 4 are clamped to the guide.

Once again showing a transfer area, FIG. 14 illustrates a third embodiment of the inventive method. Very diagrammatically two conveying paths A and B with guide channels 61 are shown and in the guide channels 61, as shown in greater detail in FIG. 4, conveying elements 5 move. The conveying elements comprise second coupling parts 2 having an opening 17 oriented at right angles to the conveying direction. The holding element 4 has an identical through hole 17. The first coupling part 1 is constituted by a bolt 18 with a cross-section matched to the opening 17 and being movable in said openings at right angles to the conveying direction (arrow Q). Depending on the sliding position of the bolt 18, the holding element is coupled to a conveying element 5 movable on the conveying path A or to a conveying element 5 movable on the conveying path B. The openings 17 may be replaced by correspondingly oriented, outwardly narrowing grooves.

If the bolt 18 is at least partly made from a magnetic materisl, it is possible to drive it in the Q-direction with the aid of e.g. correspondingly controllable electromagnets 19.

The embodiment of the inventive method according to FIG. 14, in which a first coupling part is displaced at right angles to the conveying direction, has a position between the embodiments according to FIGS. 1 and 11. The holding element 4 only has one, first coupling part 1 or bolt 18 (embodiment according to FIG. 1) but still, during transfer the holding element 4 is not moved transversely to the conveying direction (embodiment according to FIG. 11).

No detailed description of the drive and control means has been provided in the present specification of the method and arrangement according to the invention. However, such means are known to one skilled in the technology of conveying systems for conveying products without holding elements associated with the products. It is easily possible for the expert to adapt these means to the presently described method and arrangement.

What is claimed is:

1. A method for conveying a large number of printed products along first, second and third conveying paths, the method comprising:

providing for each conveying path a plurality of respective conveying elements each conveying element being movable along the respective conveying path and comprising a second coupling part, the second coupling part thus defining a respective conveying path therefor;

providing a plurality of holding elements, each holding element being designed for gripping one printed product and comprising a second coupling part cooperating with a first coupling part;

conveying holding elements being coupled to conveying elements, along the conveying paths, and

transferring holding elements from conveying elements associated with the first conveying path to conveying elements associated with the second conveying path and from conveying elements associated with the second conveying path to conveying elements associated with the third conveying path during continuous conveyance of the conveying elements through a first and a second transfer location through which transfer locations the first coupling parts of conveying elements associated with the first and second conveying paths or the second and third conveying path respectively run in parallel and closely spaced;

wherein the first coupling parts of the conveying elements associated with the second conveying path are designed as transverse guides oriented substantially perpendicular to the second conveying path and allowing movement of a holding element coupled thereto perpendicular to the conveying path,

wherein the step of transferring in the first transfer location comprises aligning the second coupling part of one conveying element associated with the first conveying path with one transverse guide associated with the second conveying path, and moving the holding element coupled to the one conveying element associated to the first conveying path laterally relative to the conveying paths to the one transverse guide associated with the second conveying path, and thereby coupling it to the one transverse guide associated with second conveying path,

wherein the step of transferring in the second transfer location comprises aligning one transverse guide associated with the second conveying path with the first coupling part of one conveying element associated with the third conveying path, and moving the holding element coupled to the one transverse guide associated to the second conveying path laterally relative to the conveying paths to the one conveying element associated with the third conveying path, and thereby coupling it to the one conveying element associated with the third conveying path,

and wherein during conveyance along the second conveying path between the first and the second transfer location each holding element is moved along the one transverse guide to which it is coupled.

2. A method for conveying a large number of printed products along first and second conveying paths, the method comprising:

providing for each conveying path a plurality of respective elements each conveying element being movable along the respective conveying path and comprising a second coupling part, the second coupling part thus defining a respective conveying path therefor;

providing a plurality of holding elements, each holding element being designed for gripping one printed product and comprising a first coupling part cooperating with a first coupling part;

conveying holding elements being coupled to conveying elements, along the conveying paths, and

transferring holding elements from conveying elements associated with the first conveying path to conveying elements associated with the second conveying path during continuous conveyance of the conveying elements through a first transfer location through which transfer location the second coupling parts of conveying elements associated with the first and second conveying paths respectively run in parallel and closely spaced;

wherein the first coupling parts of the conveying elements associated with the second conveying path are designed as transverse guides oriented substantially perpendicu-

lar to the second conveying path and allowing movement of a holding element coupled thereto perpendicular to the conveying path,

wherein the step of transferring in the first transfer location comprises aligning the second coupling part of one conveying element associated with the first conveying path with one transverse guide associated with the second conveying path, and moving the holding element coupled to the one conveying element associated to the first conveying path laterally relative to the conveying paths to the one transverse guide associated with the second conveying path, and thereby coupling it to the one transverse guide associated with the second conveying path,

and wherein during conveyance along the second conveying path each holding element is moved along the one transverse guide to which it is coupled.

3. The method of claim **2** practiced with respect to a third conveying path,

conveying holding elements being coupled to conveying elements, along the conveying paths, and

transferring holding elements from conveying elements associated with the second conveying path to conveying elements associated with the third conveying path during continuous conveyance of the conveying elements through a second transfer location through which transfer location the first coupling parts of conveying elements associated with the second and third conveying paths respectively run in parallel and closely spaced;

wherein the step of transferring in the second transfer location comprises aligning one transverse guide associated with the second conveying path with the first coupling part one conveying element associated with the third conveying path, and moving the holding element coupled to the one transverse guide associated to the second conveying path laterally relative to the conveying paths to the one conveying element associated with the third conveying path, and thereby coupling it to one conveying element associated with the third conveying path.

4. A method for conveying a large number of printed products along second and third conveying paths, the method comprising:

providing for each conveying path a plurality of respective conveying elements each conveying element being movable along the respective conveying path and comprising a second coupling part, the second coupling part thus defining a respective conveying path therefor;

providing a plurality of holding elements, each holding element being designed for gripping one printed product and comprising a second coupling part cooperating with a first coupling part;

conveying holding elements being coupled to conveying elements, along the conveying paths, and

transferring holding elements from conveying elements associated with the second conveying path to conveying elements associated with the first conveying path during continuous conveyance of the conveying elements through a first transfer location through which transfer location the first coupling parts of conveying elements associated with the second and third conveying paths respectively run in parallel and closely spaced;

wherein the second coupling parts of the conveying elements associated with the second conveying path are designated as transverse guides oriented substantially perpendicular to the second conveying path and allowing movement of a holding element coupled thereto perpendicular to the conveying path,

wherein the step of transferring in the first transfer location comprises aligning the second coupling part of one conveying element associated with the second conveying path with one conveying element associated with the third conveying path, and moving the holding element coupled to the one conveying element associated with the second conveying path laterally relative to the conveying paths to the one conveying element associated with the first conveying path, and thereby coupling it to the one conveying element associated with the first conveying path,

and wherein during conveyance along the second conveying path each holding element is moved along the one conveying element to which it is coupled.

5. The method of claim **4** practiced with respect to a first conveying path,

conveying holding elements being coupled to conveying elements, along the conveying paths, and

transferring holding elements from conveying elements associated with the third conveying path to conveying elements associated with the second conveying path during continuous conveyance of the conveying elements through a first transfer location through which transfer location the second coupling parts of conveying elements associated with the first and second conveying paths respectively run in parallel and closely spaced;

wherein the step of transferring in the first transfer location comprises aligning one transverse guide associated with the second conveying path with the second coupling of one conveying element associated with the first conveying path, and moving the holding element coupled to the one conveying element associated to the first conveying path laterally relative to the conveying paths to the one transverse guide associated with the second conveying path, and thereby coupling it to the one transverse guide associated with the second conveying path.

6. The method according to claim **1**, wherein holding elements are selectively transferred in transfer locations.

7. The method according to claim **2**, wherein holding elements are selectively transferred in the first transfer location.

8. The method according to claim **4**, wherein holding elements are selectively transferred in the second transfer location.

9. The method according to claim **1** wherein the second conveying path is a circular path and the first and third conveying paths each lead substantially tangentially relative to the second conveying path towards and away from the first and second transfer locations.

10. The method according to claim **9** wherein transfer is effected by moving the holding elements parallel to a radius of the circular second conveying path.

11. The method according to claim **9** wherein transfer is effected by moving the holding elements parallel to the axis of the circular second conveying path.

12. The method according to claim **1** wherein the conveying elements are conveyed along at least one of the conveying paths linked together in chains and having constant distances from each other.

13. The method according to claim **2** wherein the conveying elements are conveyed along at least one of the

conveying paths linked together in chains and having constant distances from each other.

14. The method according to claim **4** wherein the conveying elements are conveyed along at least one of the conveying paths linked together in chains and having constant distances from each other.

15. The method according to claim **1** wherein the conveying elements are conveyed along at least one of the conveying paths linked together in chains with flexible linking means or independently from each other and having varying distances from each other.

16. The method according to claim **2** wherein the conveying elements are conveyed along at least one of the conveying paths linked together in chains with flexible linking means or independently from each other and having varying distances from each other.

17. The method according to claim **4** wherein the conveying elements are conveyed along at least one of the conveying paths linked together in chains with flexible linking means or independently from each other and having varying distances from each other.

18. The method according to claim **1** wherein the second coupling parts and the transverse guides comprises combs with a narrowed neck area and the first coupling part comprises a groove with a narrowed opening and a cross section adapted to said combs and wherein combs and grooves extend perpendicular to the conveying direction at least in the transfer locations.

19. The method according to claim **2** wherein the second coupling parts and the transverse guides comprises combs with a narrowed neck area and the first coupling part comprises a groove with a narrowed opening and a cross section adapted to said combs and wherein combs and grooves extend perpendicular to the conveying direction at least in the transfer locations.

20. The method according to claim **4** wherein the second coupling parts and the transverse guides comprises combs with a narrowed neck area and the first coupling part comprises a groove with a narrowed opening and a cross section adapted to said combs and wherein combs and grooves extend perpendicular to the conveying direction at least in the transfer locations.

* * * * *