US 20140013729A1

(19) United States

(12) Patent Application Publication

Baier et al.

(10) Pub. No.: US 2014/0013729 A1

(43) Pub. Date: Jan. 16, 2014

(54) **HEATING MODULE FOR AN EXHAUST-GAS PURIFICATION SYSTEM**

(75) Inventors: **Bettina Baier**, Menden (DE); **Bernd Maurer**, Menden (DE); **Klaus Schrewe**, Menden (DE); **Frank Noack**, Menden (DE); **Thomas Kästner**, Menden (DE)

(73) Assignee: **HJS EMISSION TECHNOLOGY GMBH & CO. KG**, Menden (DE)

(21) Appl. No.: **14/005,624**

(22) PCT Filed: **Mar. 26, 2012**

(86) PCT No.: **PCT/EP12/55313**

§ 371 (c)(1), (2), (4) Date: **Sep. 17, 2013**

(30) **Foreign Application Priority Data**

Mar. 28, 2011 (DE) 20 2011 000 703.0

Publication Classification

(51) **Int. Cl.**
F01N 3/08 (2006.01)

(52) **U.S. Cl.**
CPC *F01N 3/08* (2013.01)
USPC **60/303**

(57) **ABSTRACT**

A heating module (**1**) for an exhaust-gas purification system connected to the outlet of an internal combustion engine comprises a catalytic burner, with an HC injector (**14**) and with an oxidation catalytic converter (**12**) positioned downstream of the HC injector (**14**) in the flow direction of the exhaust gas, for supplying thermal energy to an exhaust-gas purification unit of the exhaust-gas purification system. It is provided here that the heating module (**1**) has a main section (**2**), a secondary section (**3**) which comprises the catalytic burner (**12**, **14**), and a device (**4**, **5**) for controlling the exhaust-gas mass flow flowing through the secondary section (**3**). In a first embodiment, the main section (**2**) has, in the inlet region of the heating module (**1**), an overflow pipe portion (**6**) which has overflow openings (**7**), between which overflow diverting chambers (**8**) is simulated, parallel to the main section (**2**) of the heating module (**1**), the secondary section portion (**11**) with the oxidation catalytic converter (**12**). In another embodiment, it is provided that the secondary section (**3**) has, at the inlet side and outlet side, in each case one diverting chamber (**8**) which extends in the radial direction from the main section (**2**), between which diverting chamber (**8**) is simulated, parallel to the main section (**2**) of the heating module (**1**), the secondary section portion (**11**) with the oxidation catalytic converter (**12**).

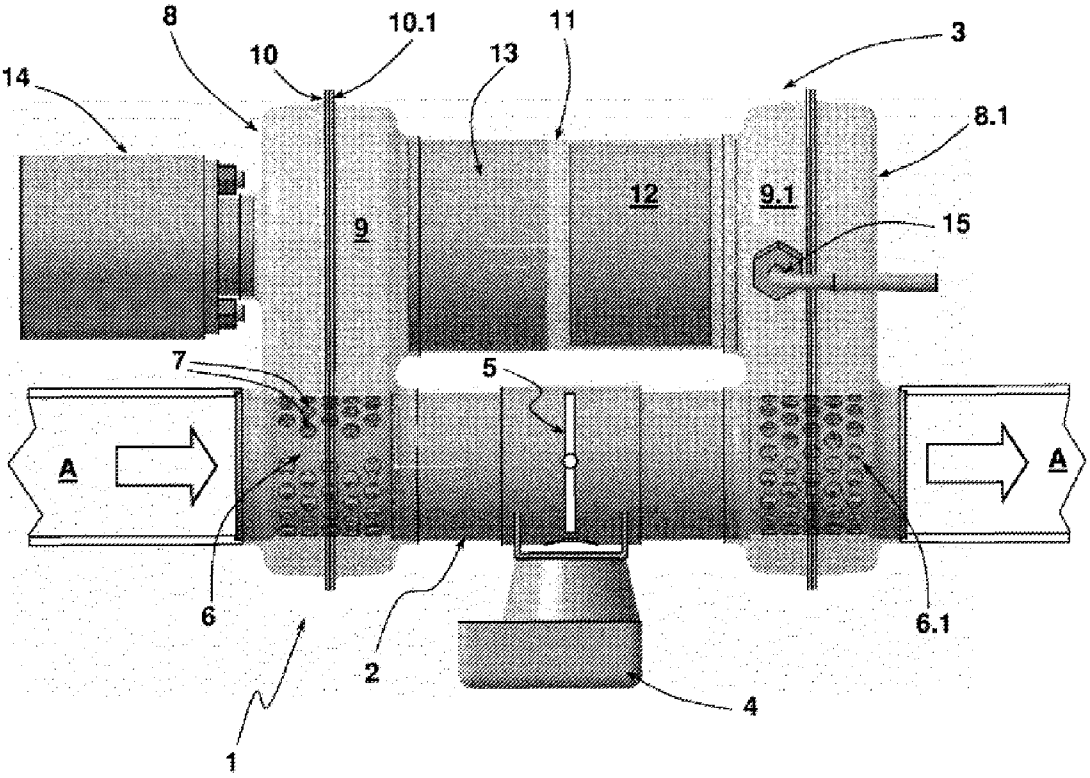

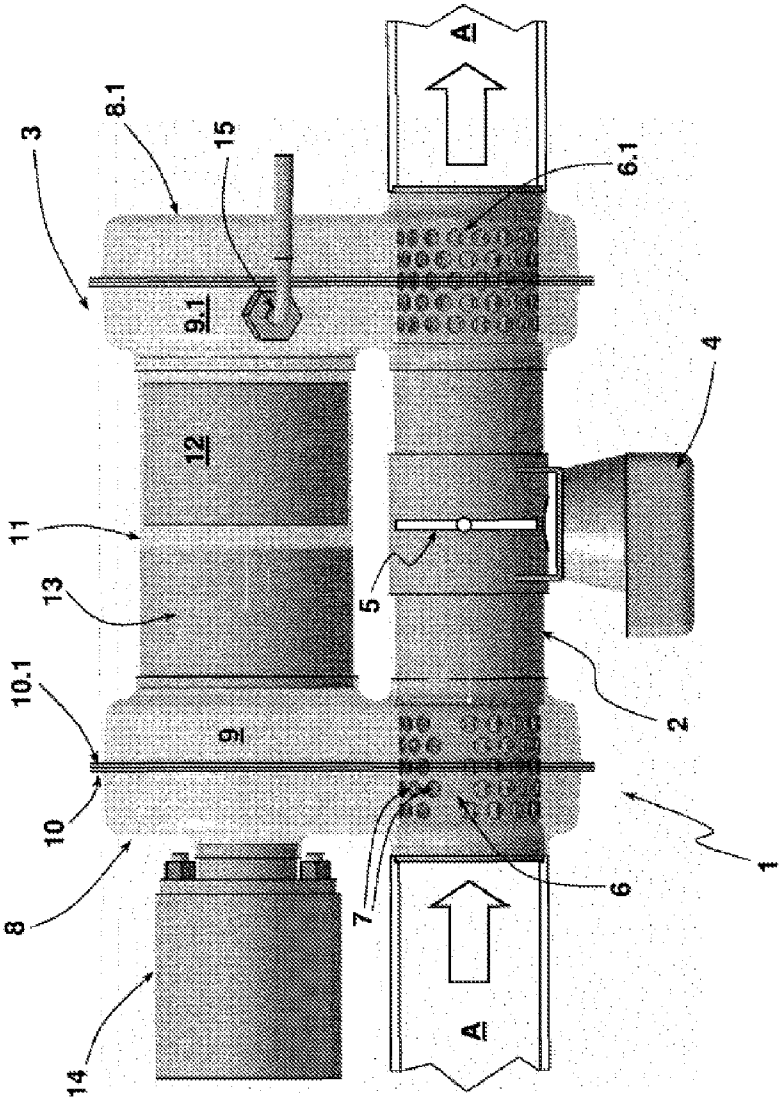

Fig. 1

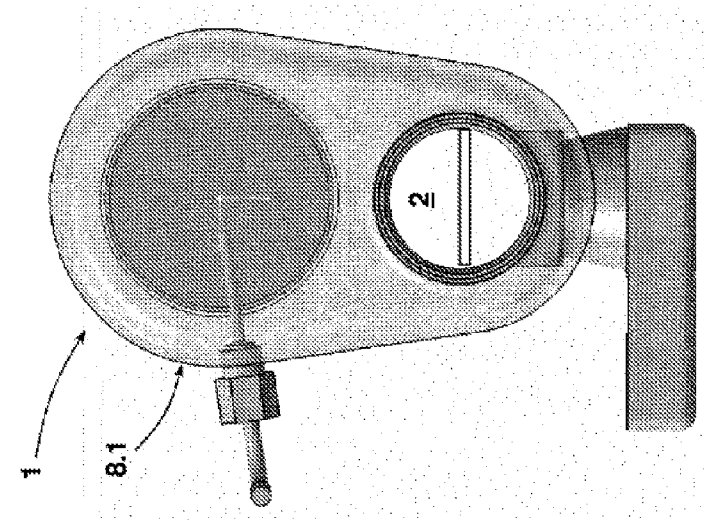

Fig. 3

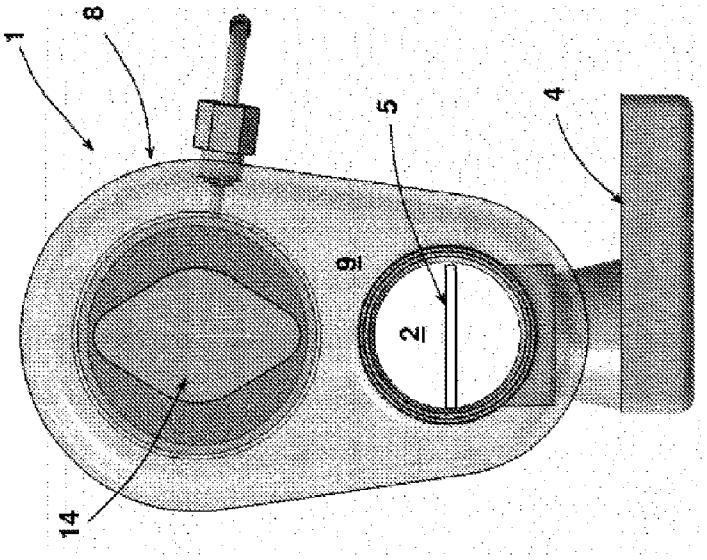

Fig. 2

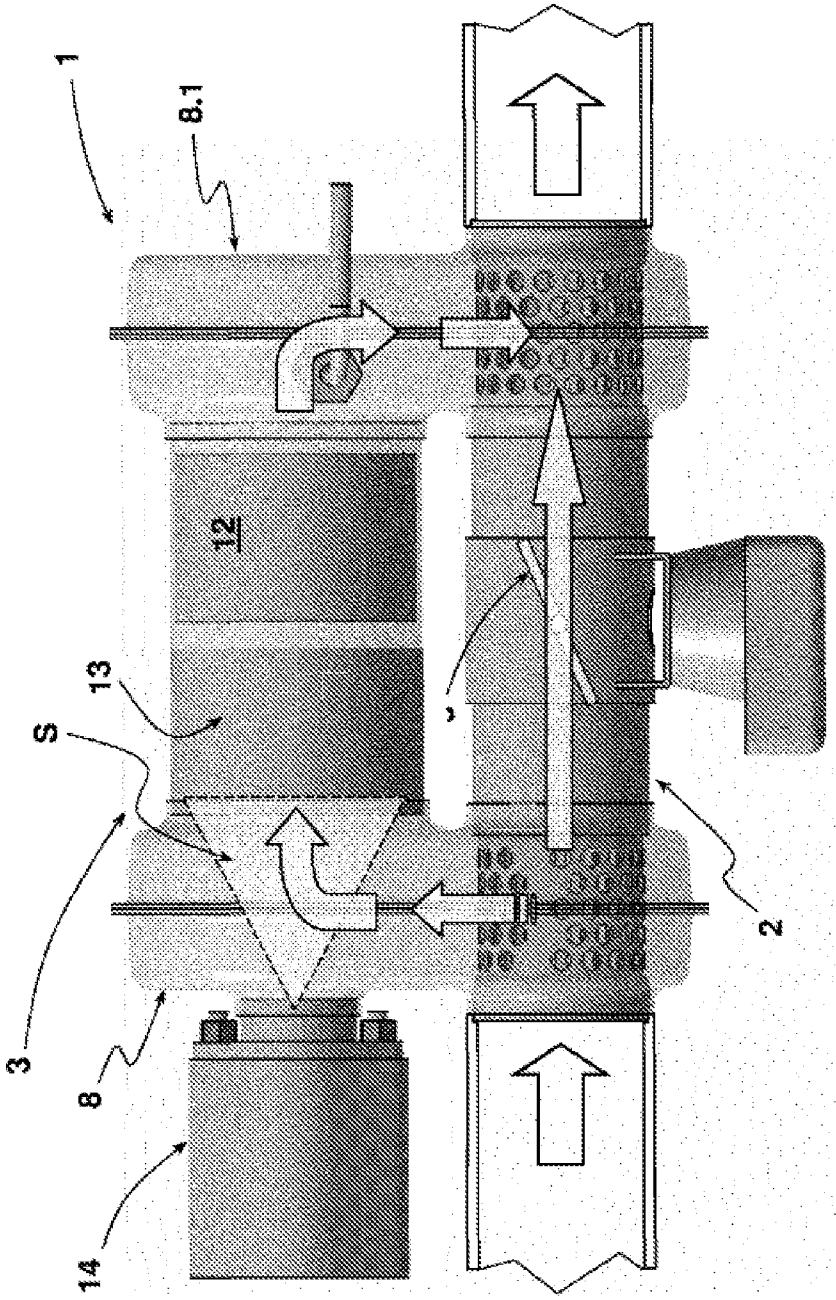

Fig. 4

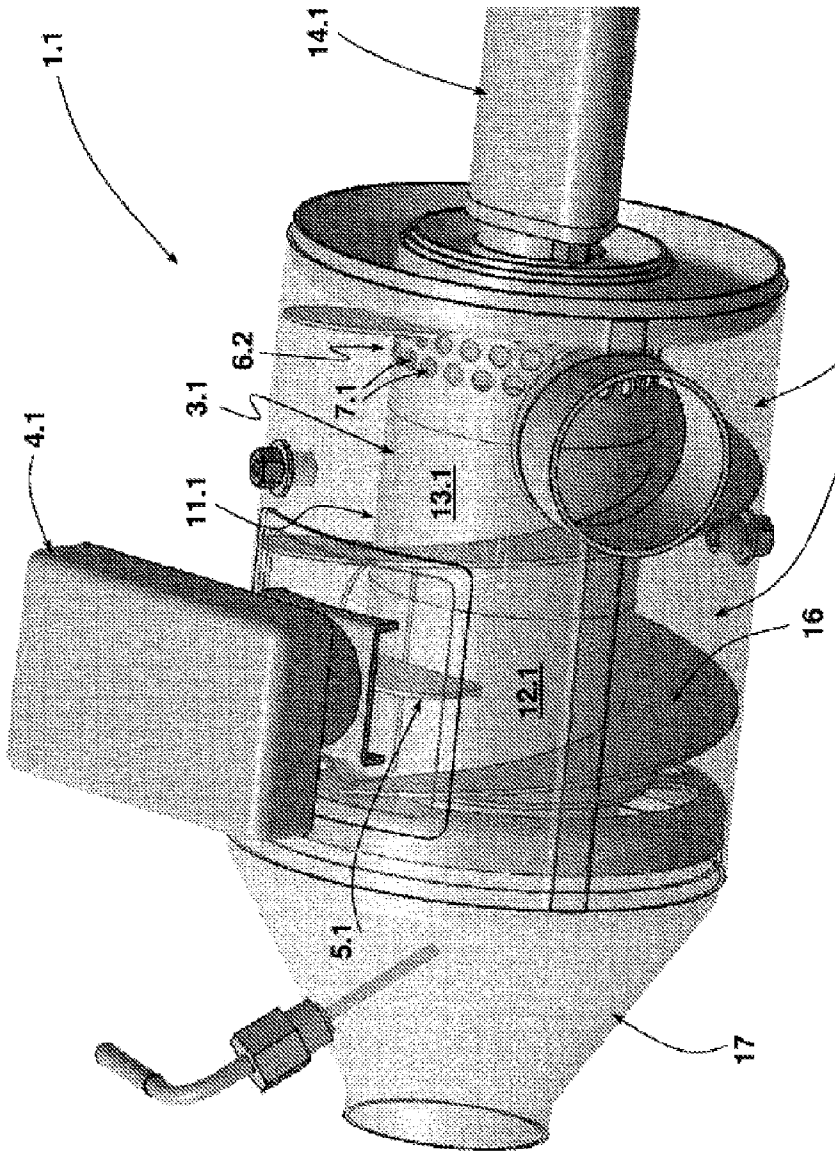

Fig. 5

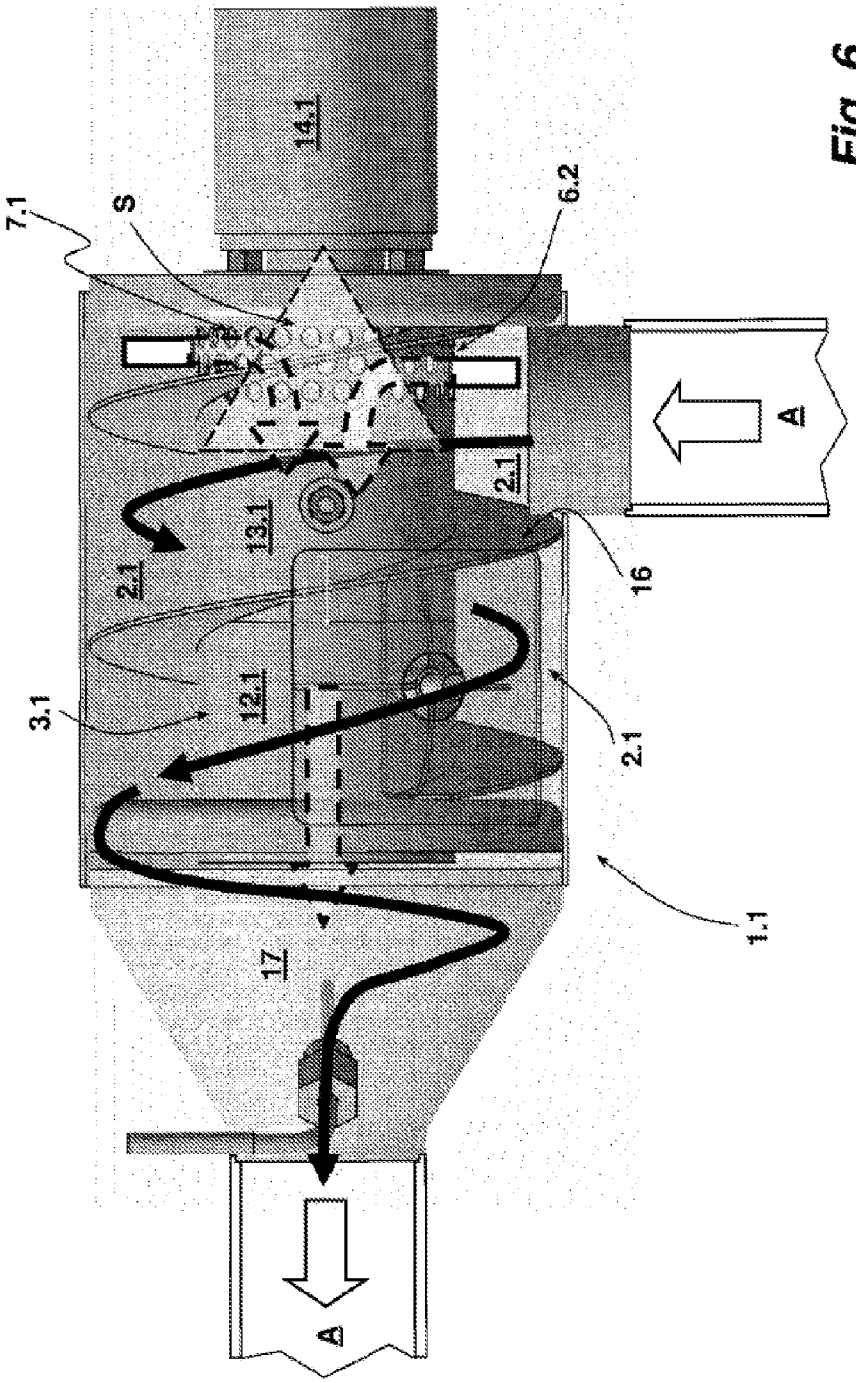

Fig. 6

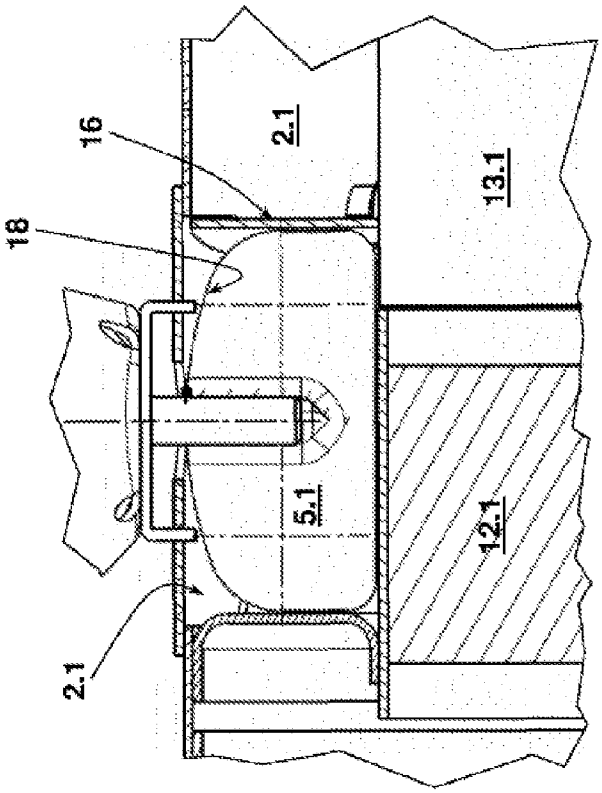

Fig. 7b

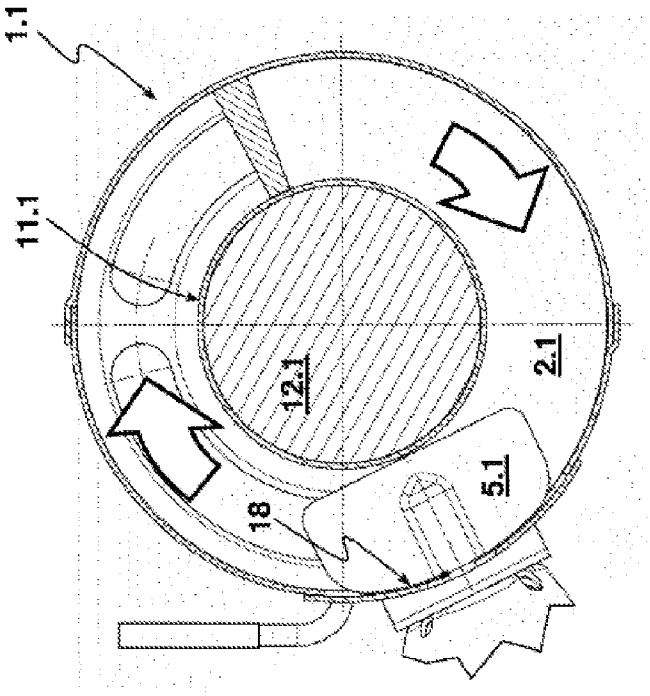

Fig. 7a

HEATING MODULE FOR AN EXHAUST-GAS PURIFICATION SYSTEM

[0001] The invention relates to a heating module for an exhaust-gas purification system connected to the outlet of an internal combustion engine, comprising a catalytic burner, with an HC injector and with an oxidation catalytic converter positioned downstream of the HC injector in the flow direction of the exhaust gas, for supplying thermal energy to an exhaust-gas purification unit of the exhaust-gas purification system, wherein the heating module has a main section, a secondary section which comprises the catalytic burner, and a device for controlling the exhaust-gas mass flow flowing through the secondary section.

[0002] Internal combustion engines, today diesel engines in particular, comprise control units that are connected in the exhaust gas system in order to reduce harmful or undesired emissions. Such a control unit can be, for example, an oxidation catalytic converter, a particle filter and/or an SCR stage. A particle filter is used to collect soot particles discharged by the internal combustion engine. The soot that is entrained in the exhaust gas accumulates on the upstream side surface of the particle filter. In order to prevent an excessive increase in the exhaust gas counter pressure during the course of the successive soot accumulation and/or to prevent the risk of clogging the filter, a regeneration process is triggered when the soot load of the particle filter reaches a sufficient level. In such a regeneration process, the soot that accumulates on the filter is burnt off (oxidized). After the completion of such a soot oxidation, the particle filter is regenerated. Only a non-combustible ash residue remains. For a soot oxidation to occur, the soot must be at a certain temperature. As a rule, this temperature is approximately 600° C. The temperature at which such a soot oxidation starts can be lower, for example, if the oxidation temperature has been reduced by an additive or by providing NO_2. If the soot is at a temperature which is below its oxidation temperature, then thermal energy has to be fed for triggering the regeneration process, in order to be able in this manner to actively trigger a regeneration. An active regeneration can be started using engine-internal measures, by changing the combustion process so that the exhaust gas is discharged at a higher temperature. In numerous applications, particularly in the non-road field, post-engine measures are, however, preferable in order to produce an active regeneration. In many cases, it is not possible in the context of exhaust emission control to have an influence on the engine-based measures.

[0003] From DE 20 2009 005 251 U1, an exhaust emission control unit is known, wherein, for the purpose of actively producing the regeneration of a particle filter, the exhaust gas system is divided into a main exhaust gas system and a secondary exhaust gas system. These two section portions form a heating module. A catalytic burner is connected in the secondary system, by means of which the partial exhaust gas flow flowing through the secondary system is heated and subsequently merged with the partial exhaust gas flow flowing through the main system, so that, in this manner, the mixed exhaust gas mass flow is at a clearly higher temperature. The increase in the temperature of the exhaust gas flow is used for the purpose of heating the soot accumulated on the upstream side of the particle filter to a sufficient temperature to trigger the regeneration process. An oxidation catalytic converter having an upstream hydrocarbon injection, which is arranged in the secondary system, is used as catalytic burner. For controlling the exhaust gas mass flow flowing through the secondary system, an exhaust gas flap, by means of which the cross-sectional area that allows free flow in the main system can be set. For the purpose of heating the oxidation catalytic converter connected in the secondary system to its light-off temperature—namely the temperature at which the desired exothermic HC conversion starts to occur on the catalytic surface—, an electrothermal heating element is connected upstream of said converter. The latter heating element is operated when this oxidation catalytic converter has to be heated to its light-off temperature. This document also describes that the catalytic burner connected in the secondary system can be oversprayed, in order to feed, in this manner, hydrocarbons to a second oxidation catalytic converter directly upstream of the particle filter in the flow direction, so that these hydrocarbons can react with the same exothermic reaction on the catalytic surface of this second oxidation catalytic converter. In this manner, a two-step heating of the exhaust gas can be carried out in this previously known emission control installation. The exhaust gas flowing out of the second oxidation catalytic converter is then at the required temperature in order to heat the soot accumulated on the upstream side of the particle filter sufficiently so that the soot oxidizes.

[0004] Similarly, it can be desirable to increase the temperature of other exhaust emission control units, for example, of an oxidation catalytic converter or of an SCR stage, in order to bring the latter more rapidly to their operating temperature.

[0005] The problem of the invention is to further develop a heating module of the type mentioned at the start in such a manner that it can be designed in a more compact construction.

[0006] This problem is solved according to the invention by a heating module of the type mentioned at the start, in which the main section in the inlet area of the heating module comprises an overflow pipe section comprising overflow openings, by means of which overflow openings a flow connection is established between the main section and the secondary section.

[0007] In this heating module, the branch into the secondary section, and, according to an embodiment example, also the opening of the secondary section into the main section, are each formed by an overflow pipe section. Such an overflow pipe section has overflow openings, which are introduced into the pipe forming the overflow pipe section. Therefore, via the overflow pipe section arranged on the inlet side with respect to the secondary section, pipe section which is located in the area of the inlet of the heating module, in the radial direction the exhaust-gas flow to be led through the secondary section exits the main section and enters the secondary section in the radial direction, if the exhaust-gas flow is to be led in its entirety or partially through the secondary section. The design of the formation of the inlet into the secondary section using such overflow pipe sections allows the formation of a branch, which is also arranged at a right angle with respect to the main flow direction of the exhaust gas, as a portion of the secondary section. The outlet-side connection of the secondary section to the main section can be formed in the same manner. According to an additional embodiment, it is provided that the main section and the secondary section open in the axial direction and thus in the main flow direction of the exhaust gas into a mixing chamber. In these designs, the longitudinal extent of the secondary section with the catalytic burner can be limited substantially to the necessary length of the oxidation catalytic converter. If, in addition, an electrothermal heating element positioned upstream of the oxidation

catalytic converter in the flow direction is associated with the catalytic burner, the length of the secondary section can be limited practically to the required length of the oxidation catalytic converter and of the heating element positioned upstream with respect to said catalytic converter. The above-described design includes that the secondary section branching at a right angle out of the main section comprises a 90 degree deflection, in order to lead the exhaust-gas flow into a secondary section portion extending parallel to the main section. The deflection in question is located typically in the area of the longitudinal axis of the secondary section portion with the oxidation catalytic converter, so that it is possible to arrange the HC injector in the area of the deflection, in particular in such a manner that its spray cone is directed upstream frontally onto the oxidation catalytic converter, or, if an electrothermal heating element is positioned upstream of said converter, the spray cone is directed onto said heating element. As a result, no additional installation space in the longitudinal extent of the heating module is needed for the required flow distance in order to form the spray cone of the HC injector. For the formation of the spray cone, in this design, the depth of the deflection present for this purpose is used, which is required in any case.

[0008] It is particularly advantageous to use a design in which the heating module comprises an electro thermal heating element positioned upstream of the oxidation catalytic converter, because said element can be used in order to evaporate the fuel introduced via the HC injector into the secondary section, before said fuel is supplied to the catalytic surface of the oxidation catalytic converter. Consequently, in such a design, only needs to be a minimum flow distance between the HC injector or its injector nozzle and the oxidation catalytic converter. Here, the required flow distance is used not as a processing section, but most predominantly for the purpose of forming a spray cone, so that the entire, or largely the entire, upstream surface of the heating element is located in the area of the spray cone. Here, one typically adjusts the spray cone in such a manner that it is supplied preferably only to the upstream surface of the heating element and not, or at most only secondarily, to wall sections of the secondary section portion positioned upstream in the flow direction.

[0009] The design of the inlet-side main section branch through an overflow pipe section, which, depending on the design of the heating module, surrounds the secondary section, or which is enclosed by the secondary section extending away, allows the formation of numerous overflow openings which are distributed preferably uniformly over the circumference of the overflow pipe section. The design of the overflow openings and their arrangement should be selected preferably in such a manner that, in the secondary section, the exhaust-gas flow flowing into the secondary section is distributed as uniformly as possible. The aim is to expose the oxidation catalytic converter arranged in the secondary section or, if present, the electrothermal heating element positioned upstream of said converter, to the most uniform possible flow over the cross-sectional area of the secondary section. In principle, it is also possible to use a design in which the overflow openings extend only over a portion of the jacket surface of the overflow pipe section, for example, only over 180 degrees. Independently of the above-described design of the overflow pipe section, it is considered to be advantageous if the cross-sectional area of the overflow openings in total is slightly larger than the cross-sectional area of the main section in the area of the overflow pipe section. As a result, the exhaust-gas counterpressure that occurs in the secondary section due to the required inserts can be kept low. According to an embodiment example, it is provided that the total of the cross-sectional areas of the overflow openings of the overflow pipe sections is 1.2 to 1.5 times larger than the cross-sectional area of the main section in the overflow pipe section. It has been found that in this regard a cross-sectional area ratio of approximately 1.3 turns out to be particularly advantageous, in order not to have an excessively disadvantageous influence on the flow behavior through the two sections—the main section and the secondary section.

[0010] The design of the connection of the secondary section via overflow pipe sections, as described, to the main section allows a design of the overflow pipe sections and thus of the branches by means of a corresponding dimensioning of the overflow openings, in particular with regard to their number and their diameter, so that the exhaust-gas flow led through the main section, as it flows through the main section of the heating module, undergoes only a minimal and thus negligible exhaust-gas counter pressure buildup at the branches.

[0011] The overflow pipe section limits the main section, depending on the design of the heating module on the outside or inside. In the first design, the exhaust gas to be led through the secondary section is led in the radial direction outward from the main section into the secondary section. The oxidation catalytic converter and optionally the heating element positioned upstream of said converter are then located in a pipe arranged parallel to the main section, as secondary section portion. According to the other design, the secondary section is located in a secondary section portion inside the main section, preferably in a concentric arrangement relative to the latter section. The transition from the main section to the secondary section in this design occurs in the radial direction toward the interior. In a design in which the secondary section portion with the catalytic burner is located inside the pipe delimiting the main section on the outside, during the operation of the catalytic burner in the secondary section, not only the exhaust-gas flow flowing through the secondary section, but also a partial exhaust-gas flow flowing through the main section, are heated, because the latter partial flow flows past the outer jacket surface of the secondary section portion containing the catalytic burner. Thus, no additional heat loss needs to be tolerated. Moreover, the temperature difference between the exhaust-gas flow flowing out of the secondary section and the exhaust-gas flow flowing through the main section, at the time of the merging of the two partial flows, is lower, which in turn produces an advantageous effect on rapid mixing, and the resulting temperature uniformity achieved in the total exhaust-gas flow flowing in the connection to the outlet of the secondary section.

[0012] The return of the exhaust-gas flow led through the secondary section into the main flow can occur analogously to the situation at the inlet of the secondary section via a second overflow pipe section comprising overflow openings. The above explanations regarding the inlet-side overflow pipe section also apply equally in such a design to the overflow pipe section arranged on the outlet side with respect to the secondary section. The introduction of the exhaust-gas flow flowing out of the secondary section into the main section, or into the exhaust-gas flow flowing through the latter main section, ensures a particularly effective mixing of the two partial exhaust-gas flows which are merged at this site, over a very short distance. This means that, already after a very short

flow distance covered by the exhaust gas, behind the outlet-side overflow pipe section, the mixed exhaust-gas flow has a very uniform temperature distribution relative to its cross-sectional area.

[0013] The fluid connection between the main section and the secondary section portion with the oxidation catalytic converter and preferably also with the electrothermal heating element positioned upstream of said converter, according to a preferred embodiment example, is implemented by overflow deflection chambers in a design in which the secondary section portion with the catalytic burner extends parallel to the main section. Said chambers comprise the main section with in each case an overflow pipe section. At a distance from the main section, the secondary section portion with its inserts is connected to the overflow deflection chambers. The overflow deflection chambers constitute a portion of the secondary section. Such an embodiment allows the design of a secondary section portion with its inserts, wherein the diameter of said portion is clearly greater than the diameter of the main section. Accordingly, an oxidation catalytic converter having a correspondingly large diameter is connected in such a secondary section portion. Here, it is understood that, the greater the cross-sectional area of the oxidation catalytic converter is, the shorter said converter can be designed in terms of its longitudinal extent, at equal volume. This creates not only the possibility of designing the heating module so that its construction is accordingly shorter in the longitudinal extent, but such a measure also reduces the counter pressure and the conversion rate, and thus the temperature stress on the oxidation catalytic converter.

[0014] In principle, the advantages achieved are the same, with the exception of the mentioned overflow pipe sections, wherein, in a heating module in which the secondary section on the input side and on the output side in each case has a deflection chamber extending in a radial direction from the main section, wherein, between the deflection chambers, parallel to the main section of the heating module, the secondary section portion with the oxidation catalytic converter is located. Therefore, such a design constitutes an additional solution of the problem that is the basis of the invention.

[0015] The design of the formation of the fluid connections between the secondary section portion with the oxidation catalytic converter and the preferably downstream electro thermal heating element with the main section by means of the above-described deflection chambers allows an embodiment of said chambers as metal plate formed parts, wherein typically two such metal plate parts formed by deep drawing are assembled to form a deflection chamber. This design allows a use of identical parts for the inlet-side deflection chamber and for the outlet-side deflection chamber, at least with regard to a pre-manufacturing step. In fact, the deflection chamber parts can differ from each other in terms of the openings produced after this premanufacturing step for the connection of, for example, sensors, or, for example, an HC injector. In principle, the external deflection chamber parts can also be identical. It is only in the case of the external deflection chamber part located on the inlet-side that connection means for connecting the HC injector are provided typically. According to an embodiment example, this deflection chamber part has an injector opening with a neck which is crimped outward, to which the HC injector is attached. This deflection chamber part can be manufactured as an identical part compared to the external deflection chamber part of the other deflection chamber, wherein the HC injector opening is produced by an additional process step in this deflection chamber part produced first as an identical part.

[0016] Additional advantages and advantageous embodiments of the invention can be obtained in the following description of an embodiment example in reference to the appended figures.

[0017] FIG. **1**: shows a diagrammatic elevation and inside view of a heating module according to a first embodiment example for feeding thermal energy into the exhaust-gas section of an exhaust-gas purification system connected to the outlet of an internal combustion engine,

[0018] FIG. **2**: shows a first front side view (side view from the left) of the heating module of FIG. **1**,

[0019] FIG. **3**: shows an additional front side view (side view from the right) of the side of the heating module of FIG. **1** which is located opposite the side view of FIG. **2**,

[0020] FIG. **4**: shows a representation corresponding to that of FIG. **1** with flow arrows included in the drawing, during the operation of the heating module,

[0021] FIG. **5**: shows a perspective elevation and inside view of a heating module according to an additional embodiment example for feeding thermal energy into the exhaust-gas section of an exhaust-gas purification system connected to the outlet of an internal combustion engine,

[0022] FIG. **6**: shows a diagrammatic elevation and inside view of the heating module of FIG. **5** with flow arrows included in the drawing, during the operation of the heating module, and

[0023] FIG. **7***a*, **7***b*: show a cross-sectional representation of the heating module of FIGS. **5** and **6** (FIG. **7***a*) as well as a detail of a longitudinal section of the mentioned heating module (FIG. **7***b*) in the area of the arrangement of an exhaust-gas flap.

[0024] The heating module **1** of a first embodiment example of the invention is connected in an exhaust-gas section—not shown in further detail—of an exhaust-gas purification system. The exhaust-gas purification system in turn is connected to the outlet of a diesel engine as internal combustion engine. The exhaust-gas section in which the heating module **1** is connected is marked with the reference numeral A. The heating device **1** of the exhaust gas is located upstream in the flow direction, represented by block arrows in FIG. **1**, of an exhaust-gas purification unit, for example, a particle filter in the flow direction of the exhaust gas. An oxidation catalytic converter is preferably positioned upstream of the particle filter.

[0025] The heating module **1** according to a first embodiment example of the invention has a main section **2** and a secondary section **3**. The main section **2** is a portion of the exhaust-gas section A of the exhaust-gas purification system. Through the main section **2** of the heating module **1**, the exhaust gas discharged by the diesel engine flows, when said gas is not led through the secondary section **3**. If the heating module **1** is operated for feeding thermal energy into the exhaust-gas section, the exhaust-gas flow is led in its entirety or partially through the secondary section **3**. For controlling the exhaust-gas flow through the main section **2** and/or the secondary section **3**, an exhaust-gas flap **5** which can be actuated by an actuator **4** is arranged in the main section **2**. In FIG. **1**, the exhaust-gas flap **5** is shown in its position closing the main section **2**. Depending on the position of the exhaust-gas flap **5** within the main section **2**, the entire exhaust-gas flow can be led through the main section **2** or through the secondary section **3**, or a partial flow can also be led through

the main section **2** and the complementary partial flow can be led through the secondary section **3**.

[0026] The main section **2** of the heating module **1** comprises on the inlet side and on the outlet side with respect to the secondary section **3** in each case an overflow pipe section **6**, **6.1**. The overflow pipe section **6** of the represented embodiment example is implemented by a perforation which is formed by a plurality of overflow openings **7** extending through this pipe section. In the represented embodiment example, the overflow openings **7** have a circular cross-sectional geometry and they are distributed over the circumference in a uniform grid and designed with equal cross-sectional area. It is understood that both the arrangement of the overflow openings **7**, their cross-sectional geometry and also their size are variable, and also that, they can be in a different arrangement over the overflow pipe section, typically in the flow direction of the exhaust gas. In the represented embodiment example, the sum of the cross-sectional areas of the overflow opening **7** is approximately 1.3 times as large as the cross-sectional area of the main section **2**, typically in the area of the overflow pipe section **6**. The overflow pipe section **6.1** located on the outlet-side with respect to the secondary section **3** is designed identically. The design of the outlet-side overflow pipe section **6.1**, however, can also be designed differently from the inlet-side overflow pipe section **6**.

[0027] The overflow pipe section **6** is surrounded by an overflow deflection chamber **8**. The surrounding of the overflow pipe section **6** occurs over the circumference, because, in the represented embodiment example, the overflow openings **7** are distributed circumferentially over the overflow pipe section **6**. As a result, all the overflow openings **7** of the overflow pipe section **6** are located inside the overflow deflection chamber **8**. Due to this measure, exhaust gas can flow out of the main section **2** into the secondary section **3** over the entire circumference of the overflow pipe section **6**. The overflow deflection chamber **8** consists of two metal plate formed parts produced by deep drawing, namely the deflection chamber parts **9**, **9.1**. At the sides of the deflection chamber parts **9**, **9.1**, each of said parts has a mounting flange **10**, **10.1** by means of which the two deflection chamber parts **9**, **9.1** are connected together in a sealing manner by a bonding technique. The overflow pipe section **6.1** is surrounded in the same manner by an overflow deflection chamber **8.1**.

[0028] In parallel and at distance from the main section **2**, between the deflection chamber parts **9**, **9.1** of the overflow deflection chambers **8**, **8.1** which are directed toward each other, a secondary section portion **11** extends, which, in the represented embodiment example, is designed as a pipe with a circular cross-sectional geometry. In the secondary section portion **11**, an oxidation catalytic converter **12** is located, and in said portion an electro thermal heating element **13** is positioned upstream in the flow direction. The required connections for operating the heating element **13** are not represented in the figures for the sake of simplicity. In the external deflection chamber part **9** of the overflow deflection chamber **8**, an HC injector **14** is connected. The HC injector **14** is used for spraying in fuel (here: diesel), in order to provide hydrocarbons in this manner for the operation of the catalytic burner formed together with the oxidation catalytic converter **12**. The HC injector **14** is connected in a manner not shown in further detail to the fuel supply from which the diesel engine is also supplied.

[0029] The above-described shell design of the overflow deflection chambers **8**, **8.1** makes it possible to form said chambers from identical parts.

[0030] For the connection of the HC injector **14**, in the represented embodiment example, an injector opening is produced in the deflection chamber part **9**, and, in the deflection chamber part **9.1** of the other overflow deflection chambers **8**, an opening for receiving a temperature sensor connection is produced. The latter opening is in alignment with the longitudinal axis of the secondary section portion **11**.

[0031] The side views of FIGS. **2** and **3** of the heating module **1** show that the overflow deflection chambers **8**, **8.1** starting from the main section **2** increase in size in the direction toward the secondary section portion **11** in terms of their flow cross-sectional area. This cross-sectional area increase produces, on the inlet side, a slowing of the exhaust-gas flow led through the secondary section **3**. This is desired so that the spray cone formed by the HC injector **14** is largely not influenced at the time of the injection of fuel by the inflowing exhaust-gas flow. The fuel cone sprayed in by the HC injector **14** is designed so that said cone wets the upstream front side of the heating element **13** with fuel, wherein the spray cone has an angle such that wall sections of the secondary section portion **11** located in the flow direction before the heating element **13** are wetted with fuel. The cross-sectional area of the secondary section portion **11**, as can be seen in FIGS. **1-3**, is again slightly smaller than the flow cross-sectional area within the overflow deflection chambers **8** (the same applies to the overflow deflection chambers **8.1**) in the area of the horizontal crest of the secondary section portion **11** shown in FIGS. **2** and **3**. The consequence is that, moving into the secondary section portion **11**, a certain acceleration of the exhaust-gas flow introduced into the secondary section **3** occurs, as a result of which any spray-off of the HC injector **14** is pulled into the secondary section portion **11** and led to the electro thermal heating element **13**, and consequently undesired deposits on the wall can be avoided.

[0032] In the side view of the heating module **1** of FIGS. **2** and **3**, the exhaust-gas flap **5** is located in its position which can be pivoted by 90 degrees with respect to the representations of FIG. **1**. In this position, the exhaust gas applied to the heating module **1** flows in its entirety through the main section **2**. The reason for this is that the exhaust-gas counter pressure opposing the exhaust-gas flow applied to the heating module **1** through the secondary section **3** is slightly greater than is the case through the main section **2** and the components of the exhaust-gas purification system **1** which are downstream of the heating module **1**.

[0033] The cross-sectional area in the secondary section portion **11**, in the represented embodiment example, is slightly more than twice as large as the cross-sectional area of the main section **2**. This occurs since, for the formation of a heating module **1** having as compact a construction as possible, the cross-sectional areas of the inserts—heating element **13** and oxidation catalytic converter **12**—can be used primarily, and especially the oxidation catalytic converter **12** must have only a relatively short extent in the flow direction of the exhaust gas. It has been shown that, especially in the longitudinal extent of an exhaust-gas section, the installation space is often limited, while in the transverse direction to said longitudinal extent, possibilities exist sometimes for accommodating certain units. Due to the above-described design, the heating module **1** satisfies this requirement to a particular degree.

[0034] The overflow deflection chamber **8.1** supports a temperature sensor **15** by means of which the exhaust-gas temperature can be determined on the outlet side with respect to the oxidation catalytic converter **12**.

[0035] It also becomes clear from the representation of FIGS. **1-3** that the actuator **4** does not have to be arranged, as represented in the figures, on the bottom side of the representation of the figures of the heating module **1**; rather, the actuator **4** can be arranged in one or the other direction rotated about the longitudinal axis of the main section **2**, depending on the location where the required installation space is present in a certain application.

[0036] Below, the operation of the heating module **1** is briefly described. The heating module **1** is operated by feeding thermal energy into the exhaust-gas flow of the diesel engine, for example, in order to trigger and optionally control a regeneration of a particle filter connected in the exhaust-gas purification system downstream with respect to the heating module **1**. If the exhaust gas discharged by the diesel engine has exceeded a certain temperature, a portion of the exhaust-gas flow or the entire exhaust-gas flow is led through the secondary section **3** during the actual operation of the heating module **1**. This serves the purpose of preheating the oxidation catalytic converter **12**, to the extent possible by the heat of the exhaust-gas flow, and of bringing said converter to its operating temperature, if the temperature of the exhaust gas is sufficiently high. If it is impossible to bring the oxidation catalytic converter **12** to its light-off temperature by this measure, the electro thermal heating element **13** is additionally supplied with current, so that the oxidation catalytic converter is heated via the exhaust-gas flow heated by the heating element **13**.

[0037] If the heating module **1** is the first portion of a two-step catalytic burner arrangement, it is preferable to design the oxidation catalytic converter **12** with a higher oxidation catalytic load than the oxidation catalytic converter positioned downstream with respect to the former converter, in the main section. Consequently, in such a design, the light-off temperature of this oxidation catalytic converter **12** is lower.

[0038] For the actual operation of the heating module **1**, depending on the temperature rise to be achieved, either all the exhaust gas supplied to the heating module **1**, or only a portion thereof, is led through the secondary section **3**. Accordingly, the exhaust-gas flap **5** in the main section is set by means of the actuator **4**. Here, it is understood that, when the exhaust-gas flap **5** in the main section is in its closed position, the predominant portion of the exhaust-gas flow is led through the secondary section **3**. Conversely: If the exhaust-gas flap is in its completely open position, as can be seen in the side view of FIG. **2**, the entire exhaust-gas flow flows through the main section **2** of the heating module **1**. During the operation of the heating module **1**, the exhaust gas flowing through the secondary section **3** is heated due to the operation of the catalytic burner connected therein, which is formed in the represented embodiment example by the HC injector **14**, the heating element **13**, and the oxidation catalytic converter **12**. For this purpose, the electrical heating element **13** is supplied with current, so that the fuel injected through the HC injector **14** evaporates on said element. The spray cone S of the HC injector **14** is indicated diagrammatically in the drawing of FIG. **4**. The fuel evaporated on the heating element **13** is supplied to the catalytic surface of the oxidation catalytic converter **12** and it triggers the desired exothermic reaction. The exhaust-gas flow heated in this manner by the secondary section **3** is returned via the overflow deflection chamber **8.1** into the main section **2**, wherein a particularly effective mixing occurs over a short distance, as this hot exhaust-gas flow passes through the overflow openings **7** into the clearly cooler partial exhaust-gas flow flowing through the main section **2**.

[0039] It is understood that, through the HC injector **14**, fuel is injected into the secondary section **3** only when the oxidation catalytic converter **12** is at a temperature above its light-off temperature.

[0040] FIG. **5** shows an additional heating module **1.1** according to an additional embodiment of the invention. In principle, the heating module **1.1** is constructed like the heating module **1** of FIGS. **1-4**. Therefore, the explanations pertaining to the heating module **1** also apply to the heating module **1.1**, unless otherwise explained below.

[0041] In the heating module **1.1**, the secondary section portion **11.1**, with the oxidation catalytic converter **12.1** and the heating element **13.1** which is positioned upstream of said converter, is arranged within the main section **2.1**. In this design and in the represented embodiment example of the heating module **1.1**, the main section **2.1** and the secondary section **3.1** are in a concentric arrangement with respect to each other. The exhaust-gas section A opens, in the represented embodiment example, radially into the main section **2.1**. The main section **2.1**, owing to the concentric arrangement, is limited in the radial direction on the inside by the secondary section **3.1**. In the area of the inlet of the heating module **1.1**, an overflow pipe section **6.2** is positioned upstream of the secondary section portion **11.1**. The overflow pipe section **6.2** is also formed like the overflow pipe section **6**, **6.1** of the embodiment example of FIGS. **1-4**. Therefore, the explanations in this regard also apply to the overflow pipe section **6.2** of the heating module **1.1**. The overflow openings **7.1** are introduced circumferentially into the overflow pipe section **6.2**, and, in the represented embodiment example, they have a circular cross-sectional geometry. Thus, the overflow pipe section **6.2** or its overflow openings **7.1** form(s) the inlet and thus the flow connection between the main section **2.1** and the secondary section **3.1**. In contrast to the heating module **1**, in the heating module **1.1**, the exhaust-gas flow which is to be led through the secondary section **3.1**, exits in the radial direction on the inside, and thus from the inner jacket surface of the main section **2.1** and into the secondary section **3.1**. An HC injector **14.1**, with regard to its injection nozzle, is located in an axial arrangement with respect to the secondary section **3.1**, that is to say also like the HC injector **14** of the heating module **1**. The inlet opening for the inflow of the exhaust gas into the main section can alternatively also be designed to be tangential or axial relative to the main flow direction of the exhaust gas through the heating module **1.1**. In an axially arranged inlet opening, this opening can be designed in the form of a ring, if desired.

[0042] In the heating module **1.1** as well, the electrical connections for the heating element **13.1** are not represented, for simplicity's sake.

[0043] The main section **2.1** thus surrounds the secondary section **3.1** and thus forms a ring chamber. Into this ring chamber, a helix **16** is inserted as a guide element by means of which the exhaust-gas flow flowing in the radial direction into the main section **2.1** is given a rotatory movement component. Therefore, owing to this design, the exhaust-gas flow flowing through the main section **2.1** is given a rotatory movement.

Due to the helix **16**, which extends over the entire height of the ring chamber, at the same time, a flow channel extending in the form of a helix around the secondary section **3.1** is formed. In the represented embodiment example, this channel is used in order to arrange an exhaust-gas flap **5.1** therein. The latter flap, as also in the embodiment example of FIGS. **1-4**, is controlled by an actuator **4.1**. The exhaust-gas flap **5.1** can be swiveled about a rotation axis that extends radially with respect to the longitudinal axis of the secondary section **3.1**. In FIG. **5**, the exhaust-gas flap **5.1** is shown in its open position. Due to the formation of the flow channel formed by the helix **16**, channel which in the end represents the most effective portion of the main section **2.1** from the flow technology, the exhaust-gas flow led through the main section **2.1** is led around the jacket surface of the secondary section **3.1**. This longer through-flow path has the advantage that, depending on the state operation, due to the temperature of the inflowing exhaust gas, the oxidation catalytic converter **12.1** arranged in the secondary section **3.1** is heated, and therefore it is typically at least approximately at the temperature of the exhaust gas. Therefore, in this embodiment example, it is in principle not necessary, in order to preheat the oxidation catalytic converter **12.1** before the operation of the catalytic burner, to lead the exhaust-gas flow or a portion thereof through the secondary section **3.1**. If the catalytic burner is in operation, the heat released by the secondary section portion **11.1** is not transferred to the environment but to the partial exhaust-gas flow flowing through the main section **2.1**. It is understood that, for the purpose of heating the oxidation catalytic converter **12.1**, on the one hand, and the partial exhaust-gas flow flowing through the main section **2.1**, on the other hand, the longer flow distance of the main section, due to the flow chamber formed by the helix **16**, ensures a particularly effective heat transfer.

[0044] FIG. **6** shows a representation during the operation of the heating module **1.1**, which in principle, corresponds to the representation of FIG. **4** pertaining to the heating module **1**. In this figure, flow arrows are recorded in a diagrammatic elevation and inside view. The exhaust-gas flow flowing through the overflow openings **7.1** of the overflow pipe section **6.2** into the secondary section **3.1** is identified by the arrows framed by a broken line since the exhaust-gas flow in this regard is located within the secondary section **3.1**. The exhaust-gas flap **5.1**, for the purpose of increasing the exhaust-gas counter pressure, is located in the main section **2.1** in a position rotated by 90 degrees with respect to the representation in FIG. **5**. In this position, the exhaust-gas flap **5.1** does not close the flow channel completely, as explained below in reference to FIGS. **7***a*, **7***b*, so that a smaller partial exhaust-gas flow flows through the main section **2.1**. The rotation of this partial exhaust-gas flow around the secondary section **3.1** is represented diagrammatically by arrows.

[0045] From the cross-sectional representation of FIG. **7***a* through the heating module **1.1** in the longitudinal extent of the same, shortly before the exhaust-gas flap **5.1**, the geometry of the exhaust-gas flap **5.1** in its open position (see also FIG. **5**) can be seen. The rotatory flow of the exhaust-gas flow through the main section **2.1** is indicated by block arrows. One can also easily see the concentric arrangement of the secondary section portion **11.1**, with the oxidation catalytic converter **12.1** arranged in the sectional plane, with respect to the main section **2.1**. The exhaust-gas flap **5.1** in the radial direction toward the outside comprises a curved closure **18** which is adapted to the curvature of the housing surrounding the main section **2.1**. If the exhaust-gas flap **5.1**, on the other hand, is in its closed position, as shown in FIG. **7***b*, it becomes apparent that in this position, owing to the closure **18**, the main section **2.1** is not completely closed by the exhaust flap **4.1**, as described above, so that, in this position, a certain partial exhaust-gas flow flows through the main section **2.1** past the exhaust-gas flap **5.1**.

[0046] At the outlet of the secondary section **3.1**, a perforated metal plate not shown in the figure is located. Both the main section **2.1** and also the secondary section **3.1** open into a mixing chamber **17** which narrows conically. Into the latter chamber, the partial exhaust-gas flow led through the main section **2.1** flows in the form of a rotating ring-shaped flow, which surrounds the exhaust-gas flow leading into the mixing chamber **17** as it flows into the secondary section **3.1**. The constriction formed by the narrowing of the mixing chamber **17** and the swirling of the partial exhaust-gas flow leading into said mixing chamber through the main section **2.1** produce a particularly effective mixing of the two partial exhaust-gas flows over a very short distance. When the two partial exhaust-gas flows are merged, the partial exhaust-gas flow flowing out of the secondary section **3.1**, can also enter the mixing chamber **17**, in the form of a concentric ring-shaped flow, as the result of an appropriate aperture, with respect to the partial exhaust-gas flow exiting the main section **2.1**. If in such an arrangement, one or more guide elements are provided in addition, the partial exhaust-gas flow exiting the secondary section **3.1** in the form of a swirling flow can also lead into the mixing chamber **17**, wherein, for the purpose of an intensive mixing, the swirling of the partial exhaust-gas flow flowing out of the secondary section **3.1** is oriented in a direction opposite the swirling of the partial exhaust-gas flow flowing through the main section **2.1**. It is also possible that the partial exhaust-gas flows comprise, as a result of corresponding guide elements, radial flow components directed against each other, at the time of the flow into the mixing chamber **17**.

[0047] In FIG. **6**, the spray cone S of the HC injector **14.1** is also shown diagrammatically. Due to the radial inflow of the exhaust gas from the main section **2.1** through the overflow opening **7.1** into the secondary section **3.1**, spray-off deposits of the HC injector **14.1** on the inner side of the overflow pipe section **6.2** and the secondary section portion **11.1** abutting the former section are effectively prevented.

[0048] The design on which the heating module **1.1** is based ensures not only a temperature efficient design of the heating module but also a special space-saving design.

[0049] In the embodiment example shown in FIGS. **5** and **6**, the mixing chamber **17** connected to the outlets of the two sections **2.1**, **3.1** narrows conically in the main flow direction of the exhaust gas. Such a narrowing is in principle not required. Rather, the mixing chamber can also be designed cylindrically, and to this cylindrical section it is possible to connect, already after a short flow distance, the exhaust-gas purification unit to which the heat generated by the heating module **1.1** is to be supplied.

[0050] The invention is described in reference to embodiment examples. Without going beyond the scope of the valid claims, the person skilled in the art will be able to derive numerous additional designs embodying the invention, which do not need to be explained in detail in the context of this description. Nonetheless, these designs are also part of the disclosure content of these explanations.

LIST OF REFERENCE NUMERALS

[0051] **1**, **1.1** Heating module
[0052] **2**, **2.1** Main section
[0053] **3**, **3.1** Secondary section
[0054] **4**, **4.1** Actuator
[0055] **5**, **5.1** Exhaust-gas flap
[0056] **6**, **6.1**, **6.2** Overflow pipe section
[0057] **7**, **7.1** Overflow opening
[0058] **8**, **8.1** Overflow deflection chamber
[0059] **9**, **9.1** Deflection chamber part
[0060] **10**, **10.1** Mounting flange
[0061] **11**, **11.1** Secondary section portion
[0062] **12**, **12.1** Oxidation catalytic converter
[0063] **13**, **13.1** Heating element
[0064] **14**, **14.1** HC injector
[0065] **15** Temperature sensor
[0066] **16** Helix
[0067] **17** Mixing chamber
[0068] **18** Closure
[0069] A Exhaust-gas section
[0070] S Spray cone

1. Heating module for an exhaust-gas purification system connected to the outlet of an internal combustion engine, comprising a catalytic burner, with an HC injector (**14**, **14.1**) and with an oxidation catalytic converter (**12**, **12.1**) positioned downstream of the HC injector (**14**, **14.1**) in the flow direction of the exhaust gas, for supplying thermal energy to an exhaust-gas purification unit of the exhaust-gas purification system, wherein the heating module (**1**, **1.1**) comprises a main section (**2**, **2.1**), a secondary section (**3**, **3.1**) containing the catalytic burner (**12**, **14**; **12.1**, **14.1**) and a device (**4**, **5**; **4.1**, **5.1**) for controlling the exhaust-gas mass flow flowing through the secondary section (**3**, **3.1**), characterized in that the main section (**2**, **2.1**), in the inlet area of the heating module (**1**, **1.1**), comprises an overflow pipe section (**6**, **6.2**) comprising overflow openings (**7**, **7.1**), through which overflow openings (**7**, **7.1**) a flow connection is established between the main section (**2**, **2.1**) and the secondary section (**3**, **3.1**).

2. Heating module according to claim **1**, characterized in that the overflow openings (**7**, **7.1**) are arranged in an even distribution over the circumference of the overflow pipe section (**6**, **6.1**, **6.2**).

3. Heating module according to claim **1** or **2**, characterized in that the sum of the cross-sectional areas of the overflow openings (**7**, **7.1**) of the overflow pipe section (**6**, **6.1**, **6.2**) is greater than the cross-sectional area of the main section (**2**, **2.1**) in the overflow pipe section (**6**, **6.1**, **6.2**).

4. Heating module according to claim **3**, characterized in that the sum of the cross-sectional areas of the overflow openings (**7**, **7.1**) of the overflow pipe section (**6**, **6.1**, **6.2**) is 1.2-1.5, in particular approximately 1.3 times greater than the cross-sectional area of the main section (**2**, **2.1**) in the overflow pipe section (**6**, **6.1**, **6.2**).

5. Heating module according to one of claims **1-4**, characterized in that the main section (**2.1**) and the secondary section (**3.1**) are arranged concentrically with respect to each other.

6. Heating module according to claim **5**, characterized in that the main section (**2.1**) and the secondary section (**3.1**) open in the axial direction into a mixing chamber (**17**).

7. Heating module according to claim **6**, characterized in that the mixing chamber (**17**) narrows in the main flow direction of the exhaust gas.

8. Heating module according to one of claims **5-7**, characterized in that at least one metal plate (**16**), which is in the shape of a helix in at least some sections, is inserted in the main section (**2.1**), through which metal plate the exhaust-gas flow flowing through the main section (**2.1**) receives a rotatory movement component.

9. Heating module according to one of claims **6-8**, characterized in that the secondary section (**3.1**) opens, with insertion of a perforated metal plate, into the mixing chamber (**17**).

10. Heating module according to one of claims **6-9**, characterized in that the secondary section, with the insertion of a aperture, opens into the mixing chamber, wherein the aperture opening has a ring structure.

11. Heating module according to one of claims **6-10**, characterized in that the secondary section, which is positioned downstream of the catalytic burner, has at least one guide element which has an influence on the exhaust-gas flow flowing through the secondary section, due to which element the exhaust-gas flow flowing from the secondary section into the mixing chamber receives a rotatory movement component.

12. Heating module according to one of claims **1-4**, characterized in that the secondary section (**3**), on the outlet side, is in a fluid connection with the main section (**2**), via a second overflow pipe section (**6.1**) comprising overflow openings.

13. Heating module according to one of claim **1-4** or **12**, characterized in that the overflow sections (**6**, **6.1**) are surrounded each by one overflow deflection chamber (**8**, **8.1**) extending in the radial direction away from the main section (**2**), between which overflow deflection chambers (**8**, **8.1**), the secondary section portion (**11**) with the oxidation catalytic converter (**12**) is located, parallel to the main section (**2**) of the heating module (**1**).

14. Heating module for an exhaust-gas purification system connected to the outlet of an internal combustion engine, comprising a catalytic burner, with an HC injector (**14**) and with an oxidation catalytic converter (**12**) which is positioned downstream of the HC injector (**14**) in the flow direction of the exhaust gas, for supplying thermal energy to an exhaust-gas purification unit of the exhaust-gas purification system, wherein the heating module (**1**) comprises a main section (**2**), a secondary section (**3**) containing the catalytic burner (**12**, **14**) and a device (**4**, **5**) for controlling the exhaust-gas mass flow flowing through the secondary section, characterized in that the secondary section (**3**), on the inlet side and outlet side, comprises in each case a deflection chamber (**8**, **8.1**) extending, in the radial direction, away from the main section (**2**), between which deflection chambers (**8**, **8.1**), parallel to the main section (**2**) of the heating module (**1**), the secondary section portion (**11**) with the oxidation catalytic converter (**12**) is located.

15. Heating module according to one of claims **12-14**, characterized in that, the cross-sectional area of the inlet-side deflection chamber (**8**) broadens in the flow direction of the exhaust gas, the cross-sectional area of the outlet-side deflection chamber (**8.1**) narrows in the flow direction of the exhaust gas, and the secondary section portion (**11**) with the oxidation catalytic converter (**12**) is arranged between the sections of the deflection chambers (**8**, **8.1**) which are larger with respect to the cross-sectional area of said portion.

16. Heating module according to claim **15**, characterized in that the cross-sectional area of the secondary section portion (**11**) with the oxidation catalytic converter (**12**), which

extends between the deflection chambers (**8**, **8**.**1**), is more than twice as large as the cross-sectional area in the main section (**2**).

17. Heating module according to one of claims **13**-**16**, characterized in that the deflection chambers (**8**, **8**.**1**) each consist of two mutually connected metal plate formed parts.

18. Heating module according to claim **17**, characterized in that the deflection chambers (**8**, **8**.**1**) comprise identical parts, at least partially in regard to the deflection chamber parts forming said chambers, at least in a premanufacturing stage; for example, the deflection chamber parts (**9**.**1**) which point towards each other in the heating module (**1**) are identical parts.

19. Heating module according to claim **17** or **18**, characterized in that the deflection chamber part (**9**)—located on the outside—of the input-side deflection chamber (**8**) comprises an HC injector opening with a neck crimped outward, for the connection of the HC injector (**14**).

20. Heating module according to one of claims **1**-**19**, characterized in that the HC injector (**14**, **14**.**1**) is arranged, with its atomization nozzle, in the alignment of the longitudinal axis of the secondary section portion (**11**, **11**.**1**) containing the oxidation catalytic converter (**12**, **12**.**1**).

21. Heating module according to one of claims **1**-**20**, characterized in that, in the secondary section (**3**, **3**.**1**), an electrothermal heating element (**13**, **13**.**1**) is positioned downstream of the HC injector (**14**, **14**.**1**) in the flow direction of the exhaust gas, and upstream of the oxidation catalytic converter (**12**, **12**.**1**).

22. Heating module according to one of claims **1**-**21**, characterized in that the device (**4**, **5**; **4**.**1**, **5**.**1**) for controlling the exhaust-gas mass flow flowing through the secondary section (**3**, **3**.**1**) is arranged in the main section (**2**, **2**.**1**) of the heating module (**1**, **1**.**1**).

* * * * *