US 20110132224A1

(19) United States

(12) Patent Application Publication

Kitchen

(10) Pub. No.: US 2011/0132224 A1

(43) Pub. Date: Jun. 9, 2011

(54) SUSPENDED CABLE AMUSEMENT RIDE

(76) Inventor: **William J. Kitchen**, Windermere, FL (US)

(21) Appl. No.: **12/997,038**

(22) PCT Filed: **Feb. 12, 2010**

(86) PCT No.: **PCT/US2010/024177**

§ 371 (c)(1), (2), (4) Date: **Feb. 21, 2011**

Related U.S. Application Data

(60) Provisional application No. 61/151,919, filed on Feb. 12, 2009.

Publication Classification

(51) **Int. Cl.**

B61B 3/00	(2006.01)
E01B 25/16	(2006.01)
A63G 31/00	(2006.01)

(52) **U.S. Cl.** **104/53**

(57) **ABSTRACT**

An suspended cable amusement ride is disclosed. The cable is supported by turning beam assemblies and moved by turning beam drive assemblies. The turning beam assemblies and turning beam drive assemblies each have multiple sheave wheels supported in brackets along a turning beam. In the turning beam drive assembly the sheave wheels are driven by motors operably attached to the sheave wheels.

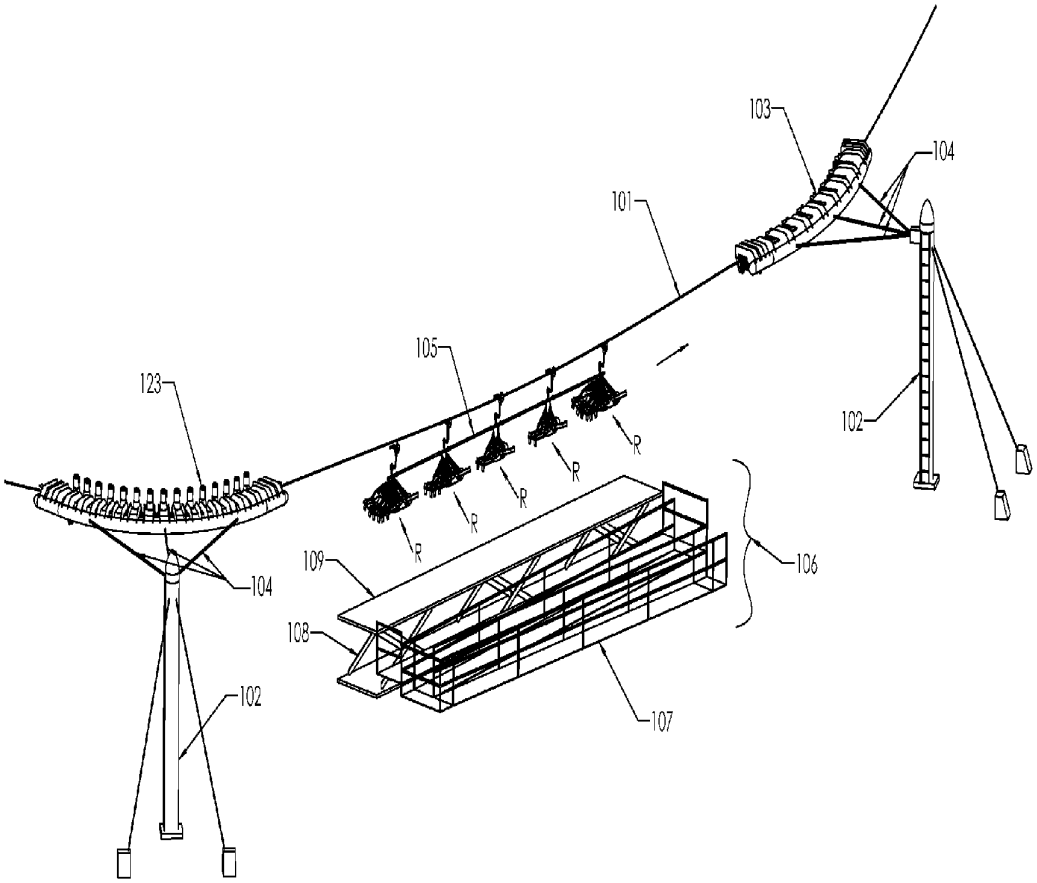

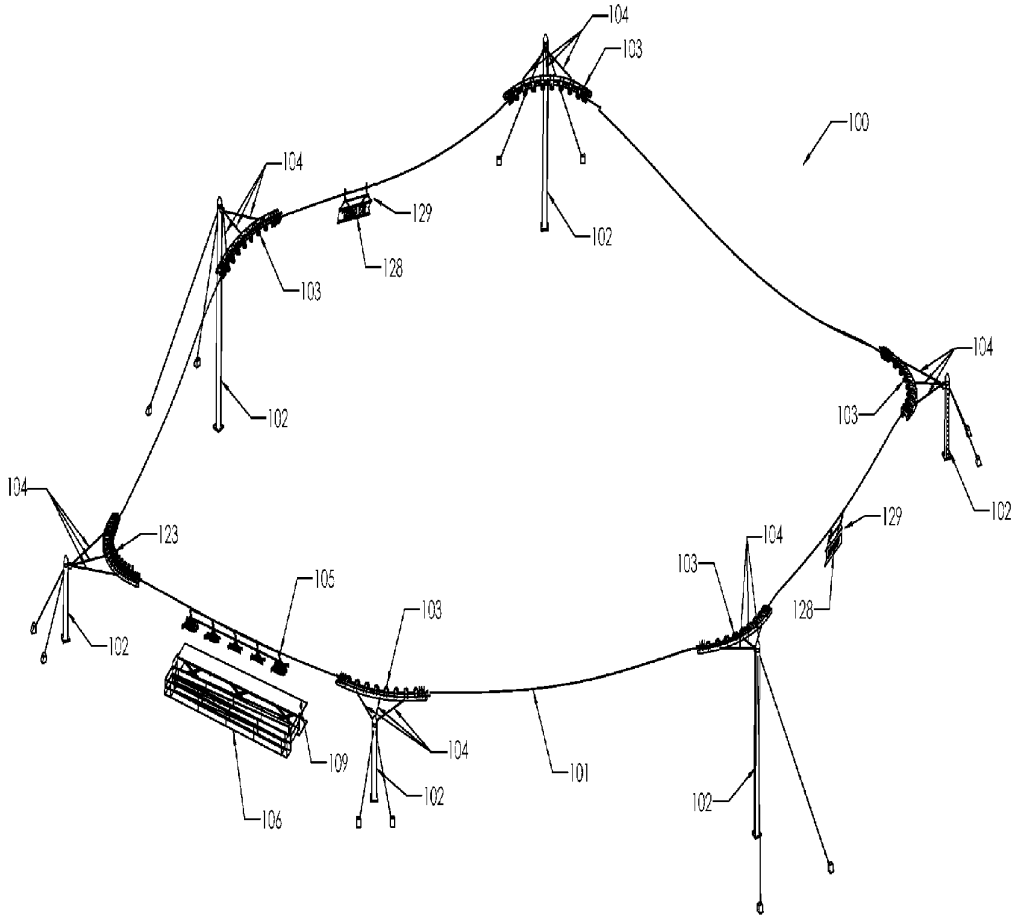
104
103
100
104
129
128
102
103
102
104
103
102
104
123
105
103
104
103
129
128
102
109
104
101
102
106
102

FIG. 1

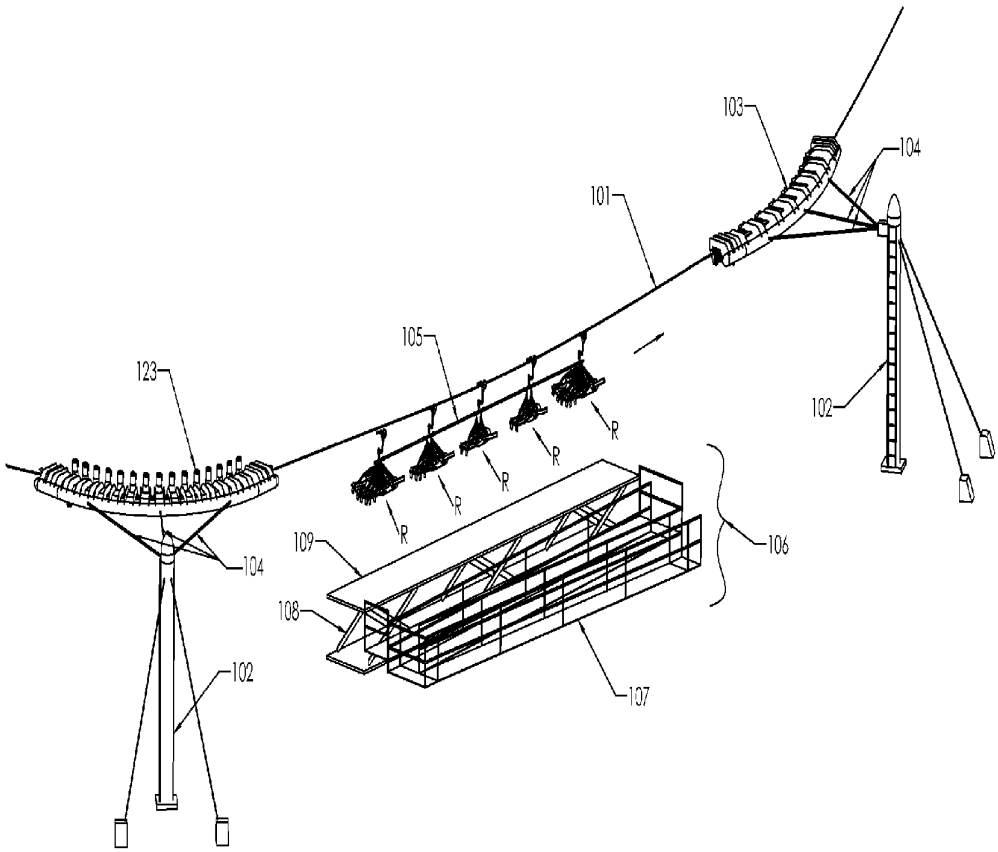

FIG. 2

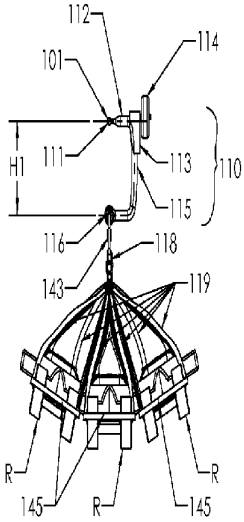
112
114
101
111
113
110
H1
115
116
118
143
119
R
145
R
R
145

FIG. 3

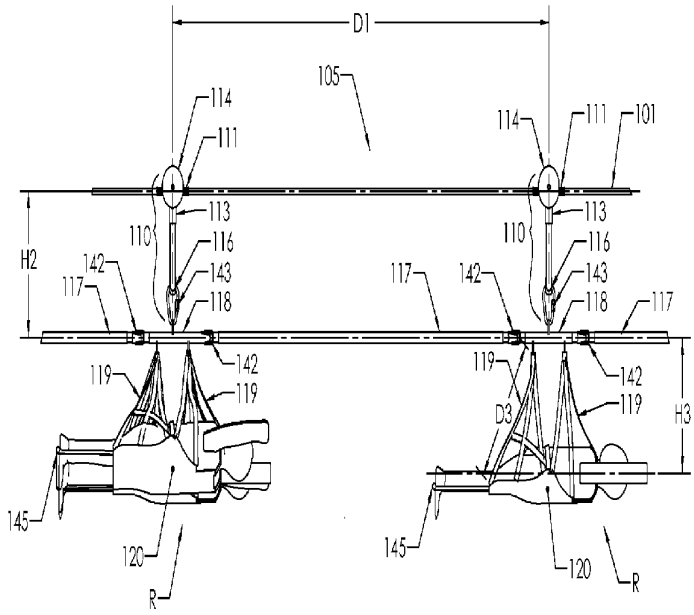
D1
105
114
111
114
111
101
113
110
116
H2
142
143
117
118
117
142
143
118
117
119
142
119
119
142
D3
119
H3
145
120
R
145
120
R

FIG. 5

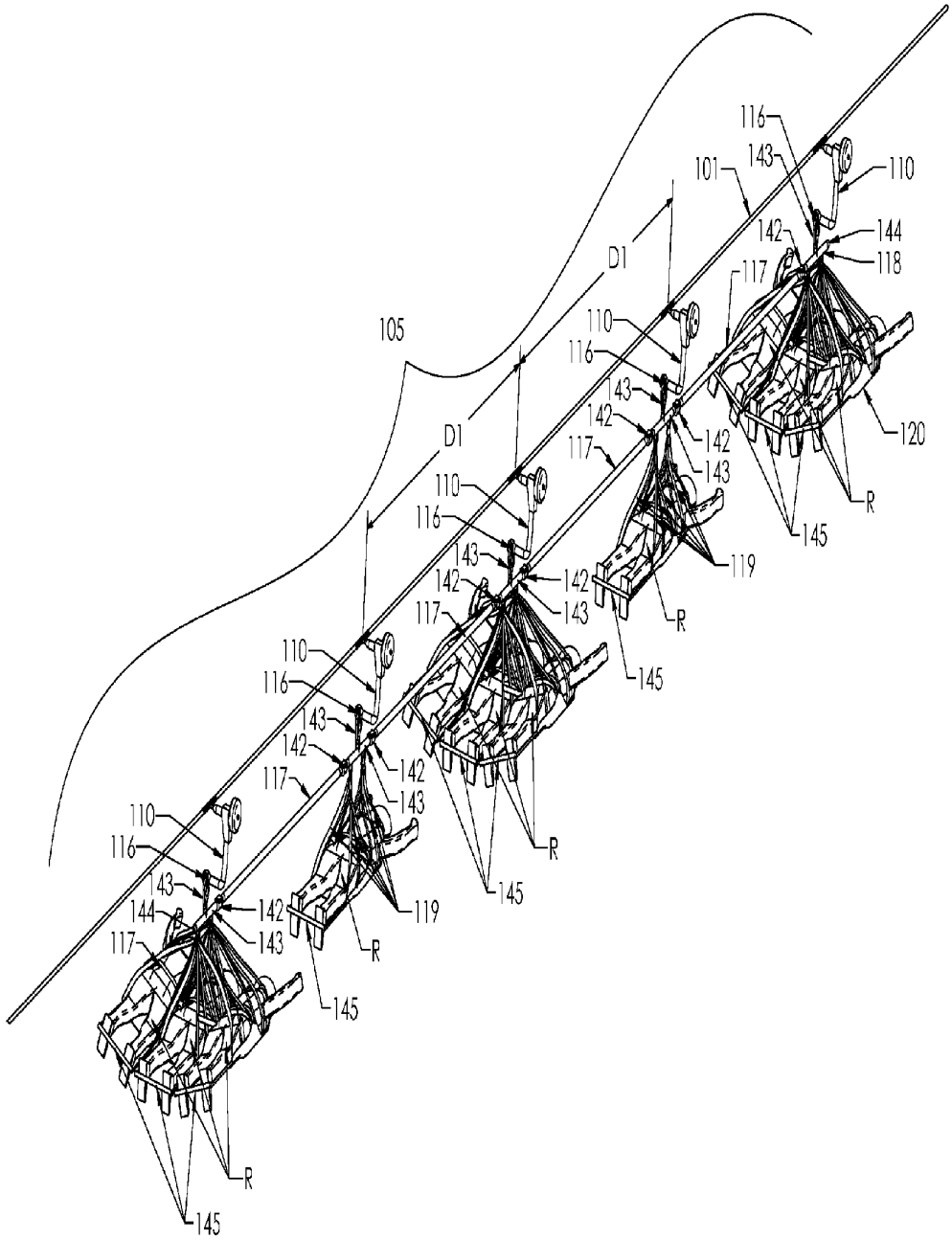

FIG. 4

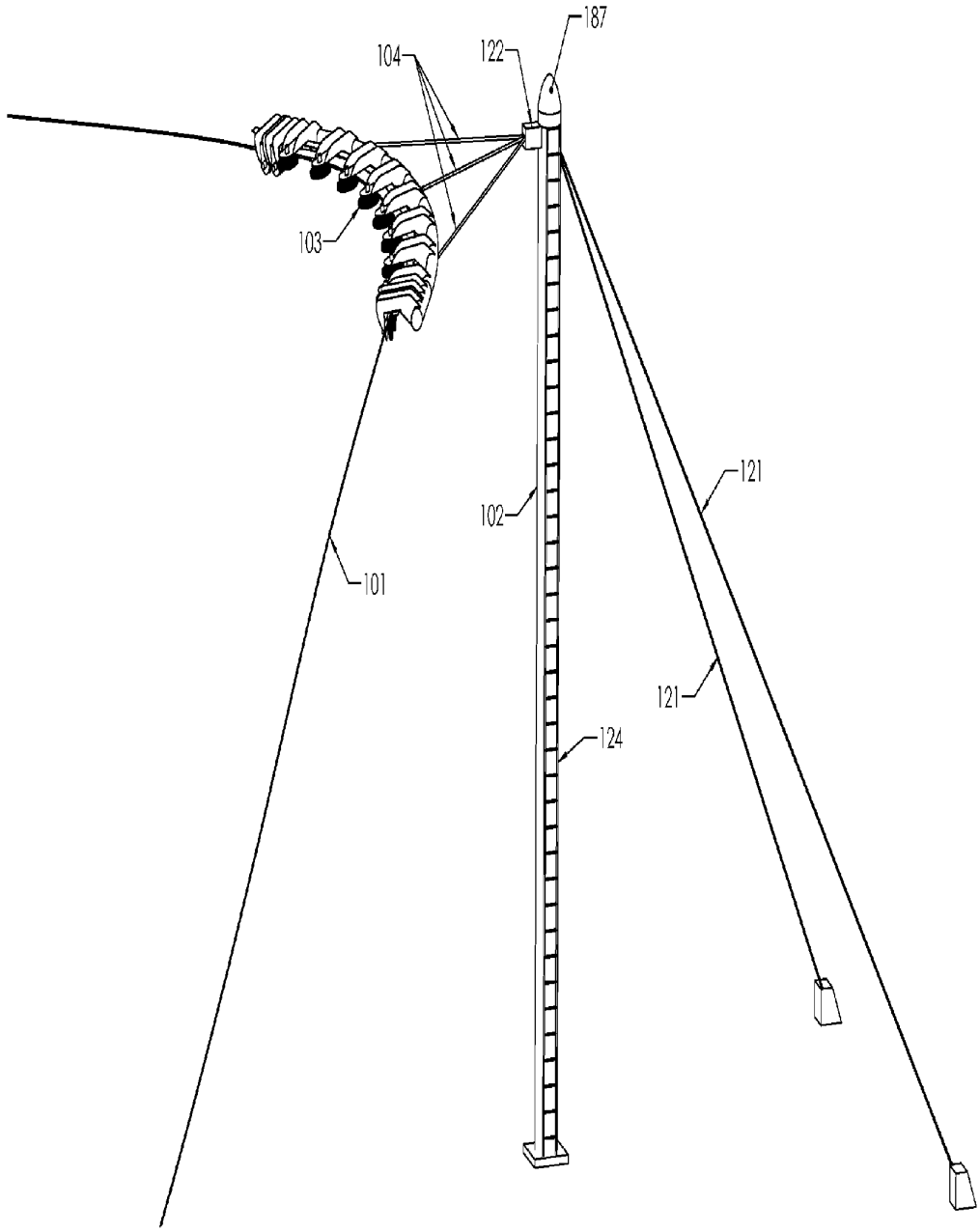

FIG. 6

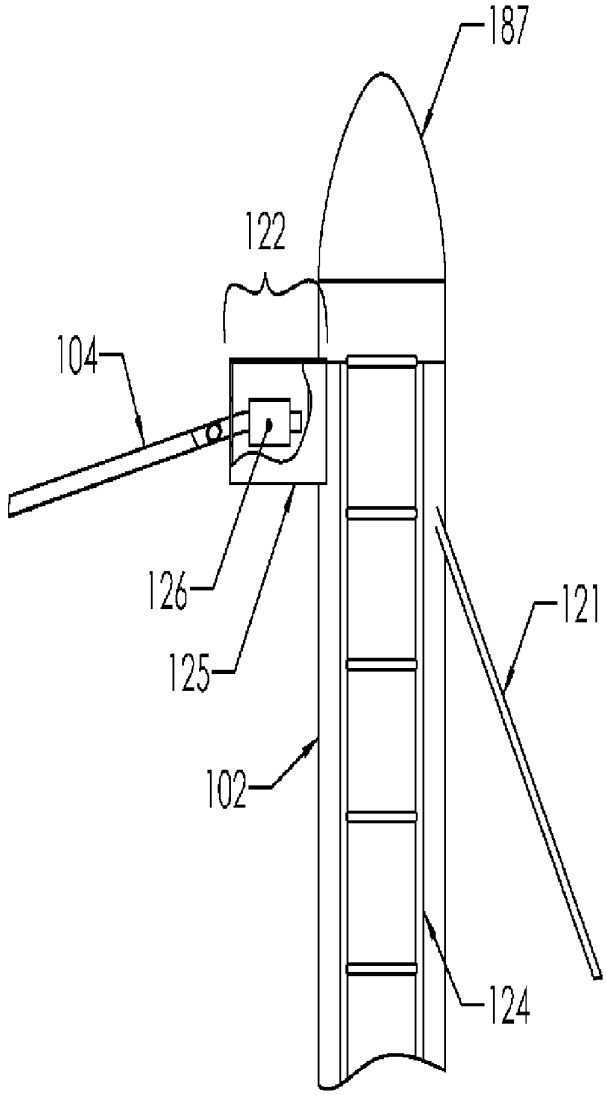

FIG. 7

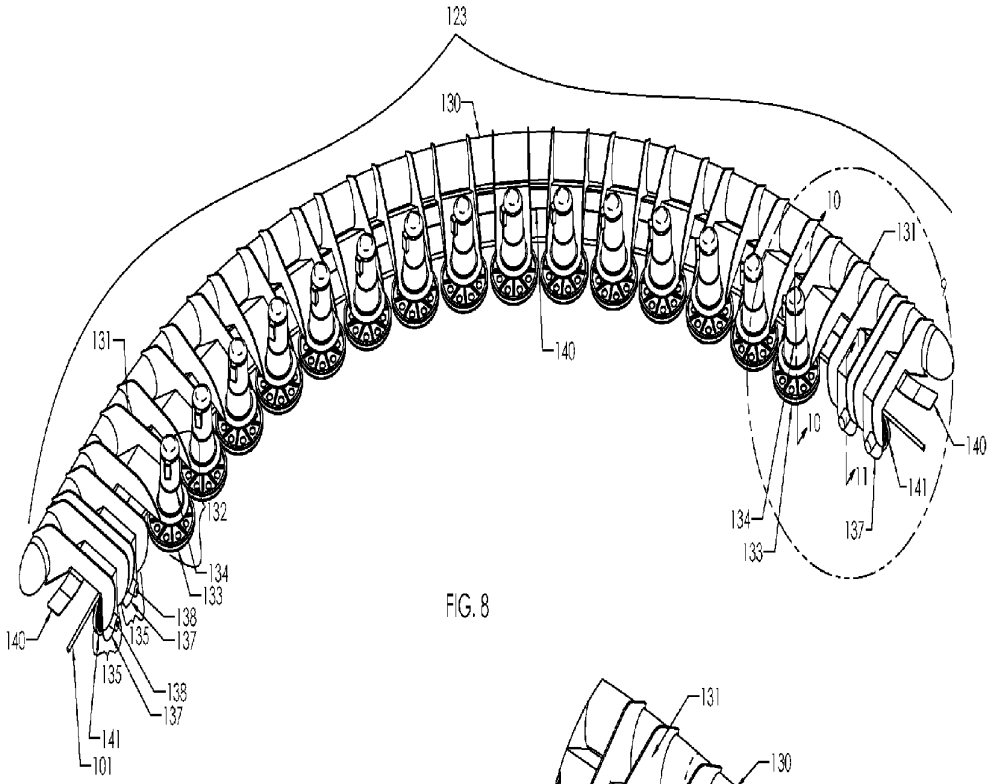
123
130
10
131
140
131
10
140
11
141
134
137
133
132
134
133
138
135
137
140
135
138
137
141
101

FIG. 8

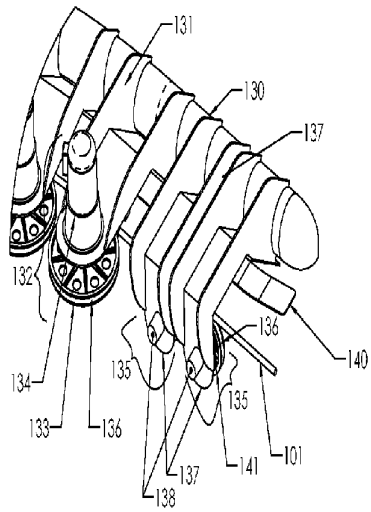
131
130
137
132
136
140
134
135
135
133
136
141
101
137
138

FIG. 9

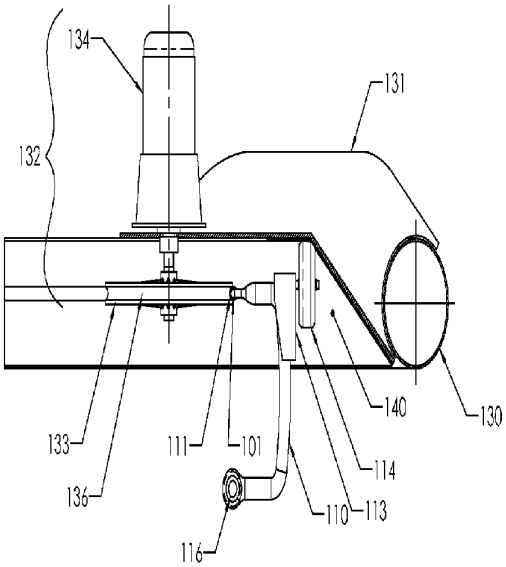
134
131
132
133
136
111
101
116
110
113
114
140
130

FIG. 10

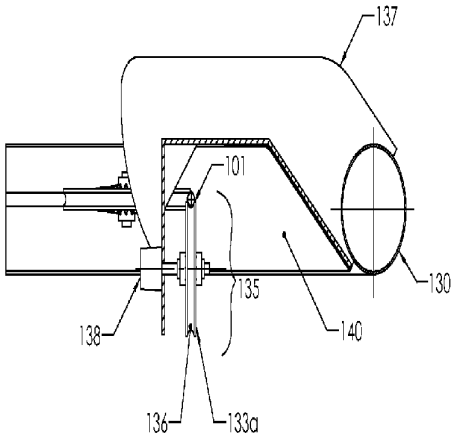
137
101
135
138
136
133a
140
130

FIG. 11

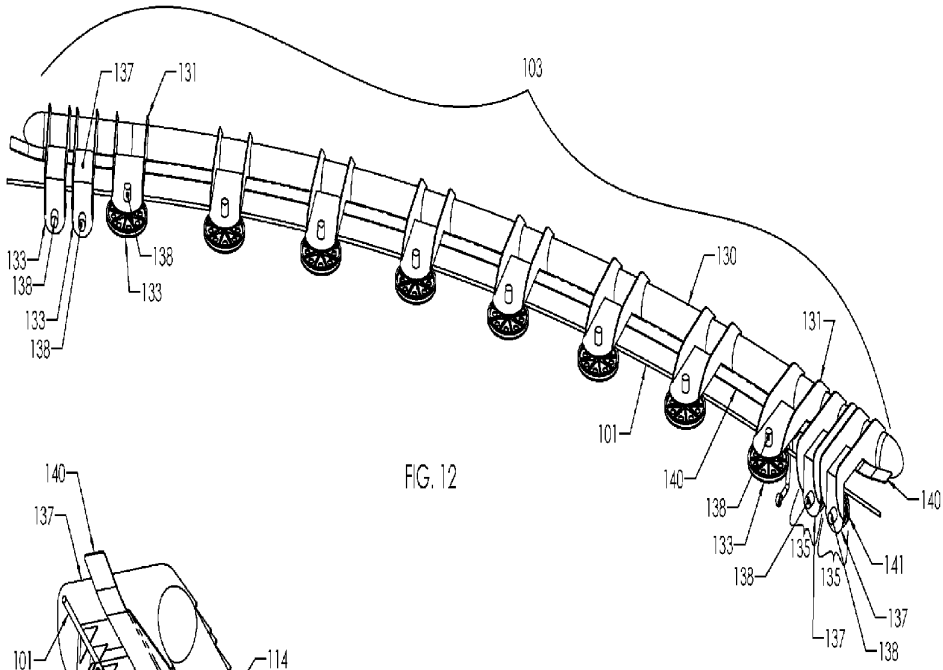
103
137
131
133
138
138
133
133
138
130
131
101
140
138
133
135
138
135
141
137
137
138
140

FIG. 12

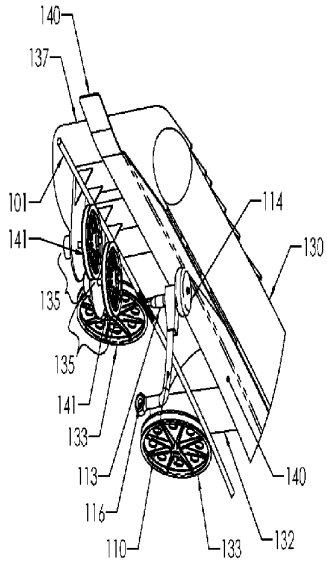
140
137
101
141
114
130
135
135
141
133
113
116
110
133
132
140

FIG. 13

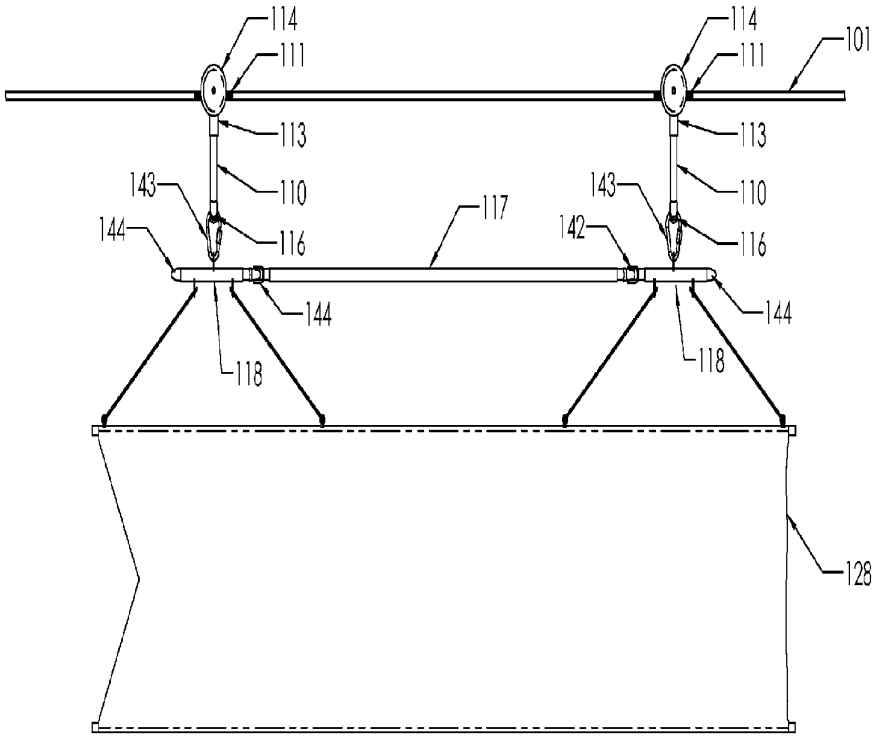
114
111
114
111
101
113
113
143
110
143
110
117
144
116
142
116
144
144
118
118
128

FIG. 14

	10	mph		90	deg.
	880	ft/min		1.571	radians
	14.67	ft/sec			
Radius	feet	20	23.50		
Angular velocity:	rad/sec	0.73	0.62		
Time:	sec	4.28	5.03		
Angular acceleration:	rad/sec/sec	0.17	0.12		
Tangential acceleraion:	ft/sec/sec	3.42	2.91		
Normal acceleraion;	ft/sec/sec	10.76	9.16		
Linear acceleration:	ft/sec/sec	14.19	12.07		
Linear acceleration:	g's	0.44	0.38		
	20	mph		90	deg.
	1760	ft/min		1.571	radians
	29.34	ft/sec			
Radius	feet	20	23.50		
Angular velocity:	rad/sec	1.47	1.25		
Time:	sec	2.14	2.52		
Angular acceleration:	rad/sec/sec	0.68	0.50		
Tangential acceleraion:	ft/sec/sec	13.70	11.66		
Normal acceleraion:	ft/sec/sec	43.04	36.63		
Linear acceleration:	ft/sec/sec	56.74	48.29		
Linear acceleration:	g's	1.76	1.50		
	25	mph		90	deg.
	2200	ft/min		1.571	radians
	36.68	ft/sec			
Radius	feet	20	23.50		
Angular velocity:	rad/sec	1.83	1.56		
Time:	sec	1.71	2.01		
Angular acceleration:	rad/sec/sec	1.07	0.78		
Tangential acceleraion:	ft/sec/sec	21.40	18.22		
Normal acceleraion:	ft/sec/sec	67.25	57.24		
Linear acceleration:	ft/sec/sec	88.66	75.45		
Linear acceleration:	g's	2.76	2.35		
	30	mph		90	deg.
	2640	ft/min		1.571	radians
	44.01	ft/sec			
Radius	feet	20	23.50		
Angular velocity:	rad/sec	2.20	1.87		
Time:	sec	1.43	1.68		
Angular acceleration:	rad/sec/sec	1.54	1.12		
Tangential acceleraion:	ft/sec/sec	30.82	26.23		
Normal acceleraion:	ft/sec/sec	96.84	82.42		
Linear acceleration:	ft/sec/sec	127.67	108.65		
Linear acceleration:	g's	3.97	3.38		
	40	mph		90	deg.
	3520	ft/min		1.571	radians
	58.68	ft/sec			
Radius	feet	20	23.50		
Angular velocity:	rad/sec	2.93	2.50		
Time:	sec	1.07	1.26		
Angular acceleration:	rad/sec/sec	2.74	1.98		
Tangential acceleraion:	ft/sec/sec	54.80	46.63		
Normal acceleraion:	ft/sec/sec	172.17	146.53		
Linear acceleration:	ft/sec/sec	226.96	193.16		
Linear acceleration:	g's	7.06	6.01		

Fig 15

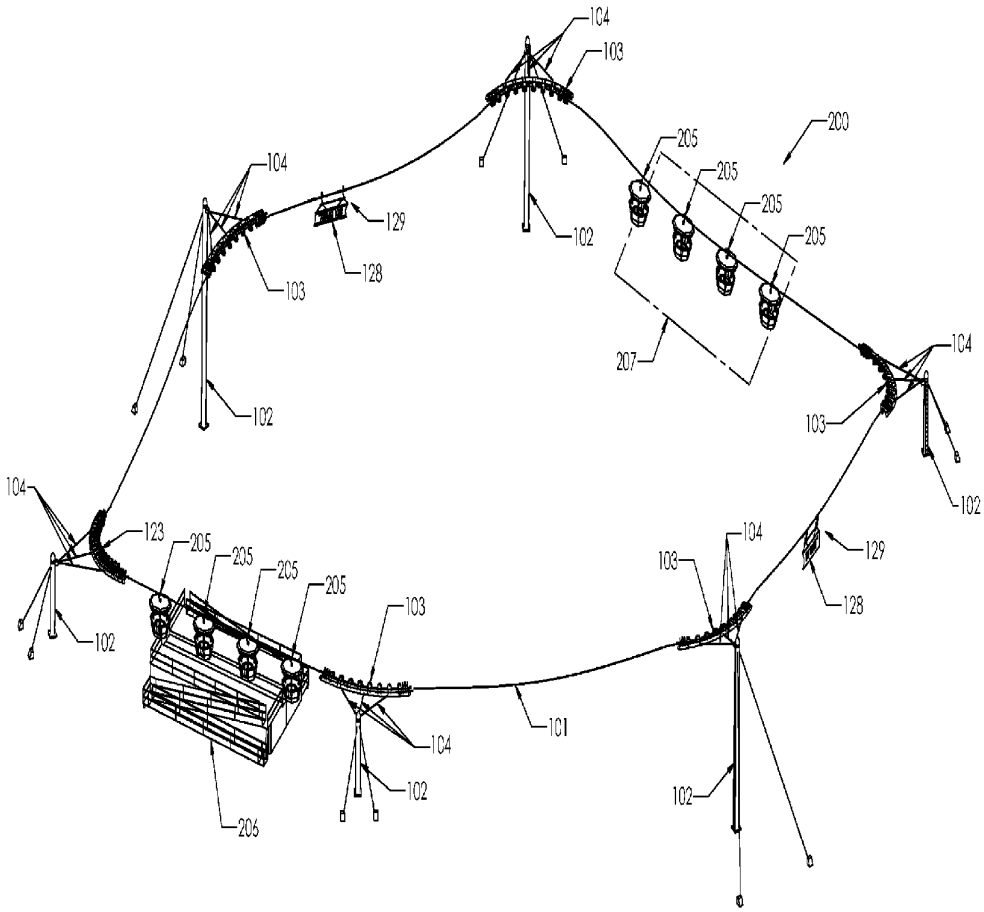
104
103
200
205
205
205
205
104
129
102
128
103
207
104
102
103
102
104
123
205
205
205
205
103
104
103
129
128
102
101
104
102
102
206

FIG. 16

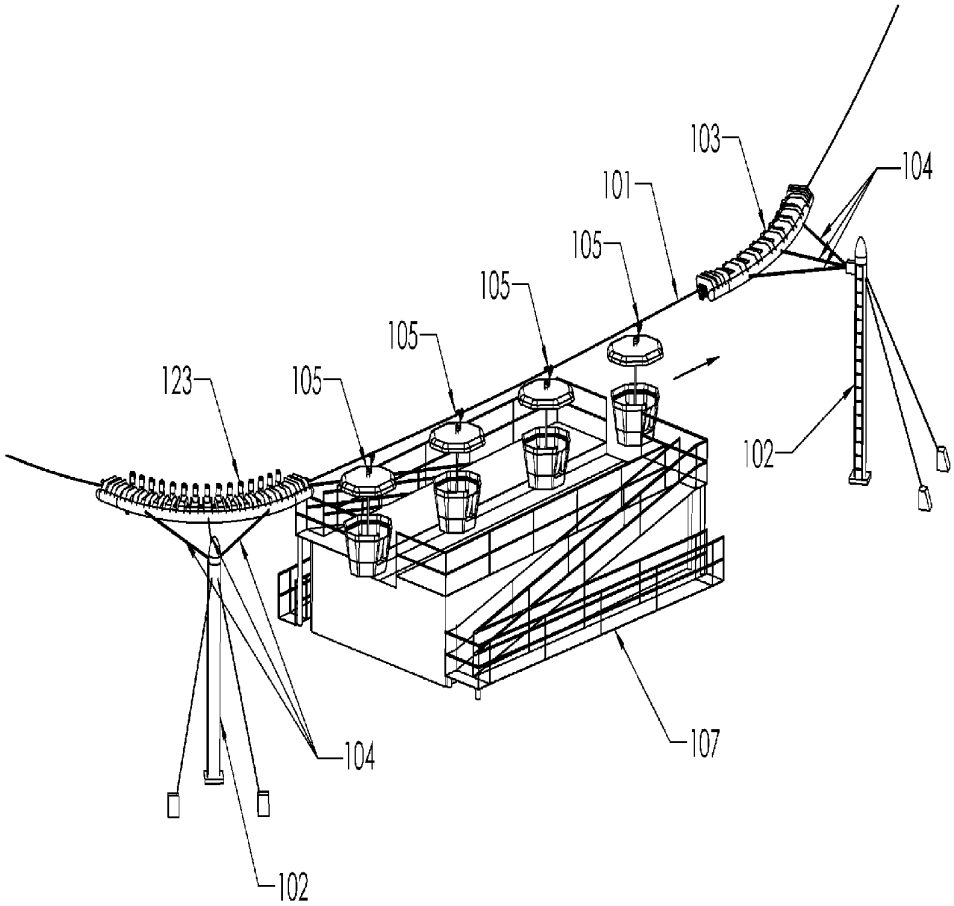

FIG. 17

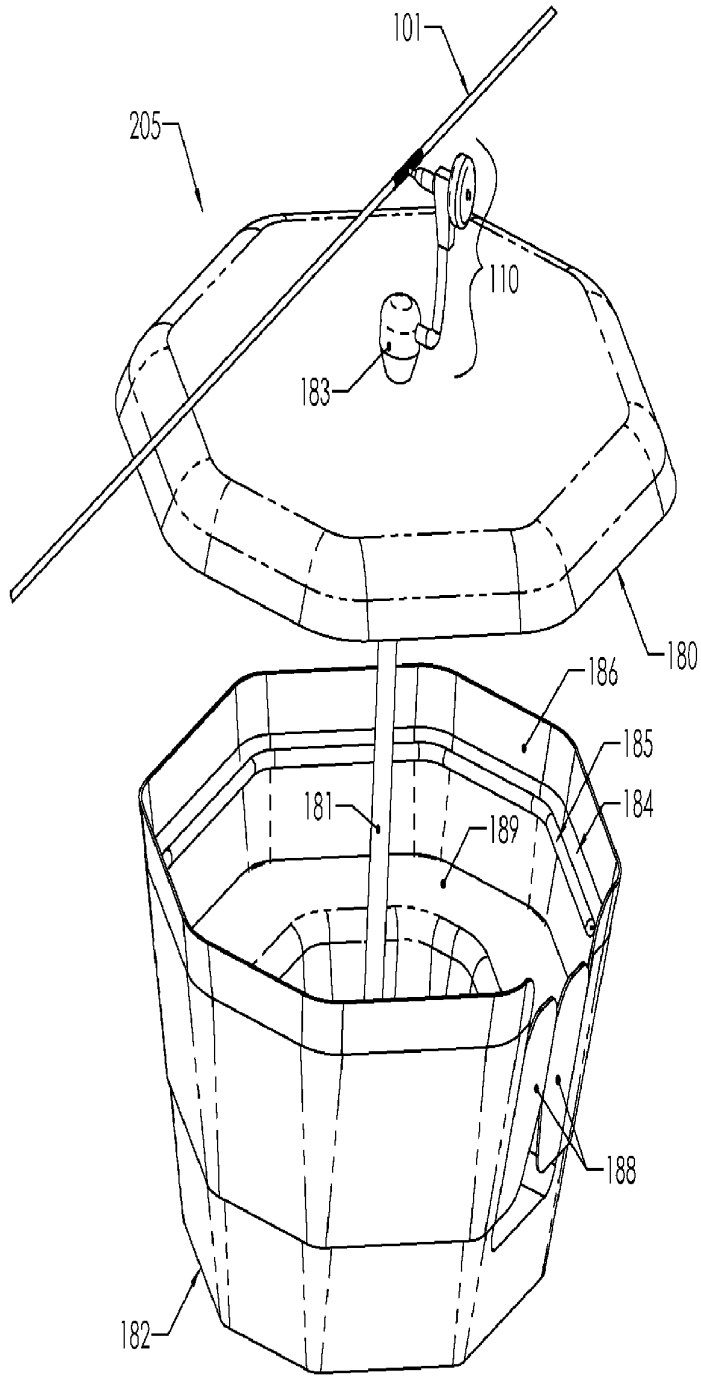

FIG. 18

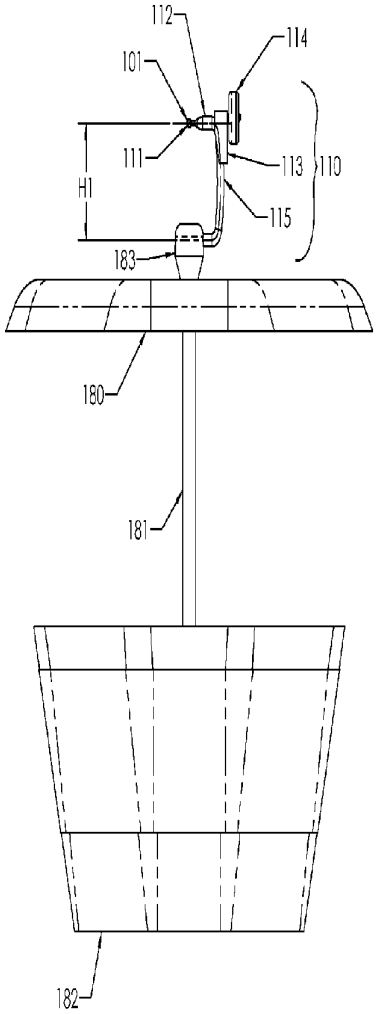
112
114
101
111
113
110
H1
115
183
180
181
182

FIG. 19

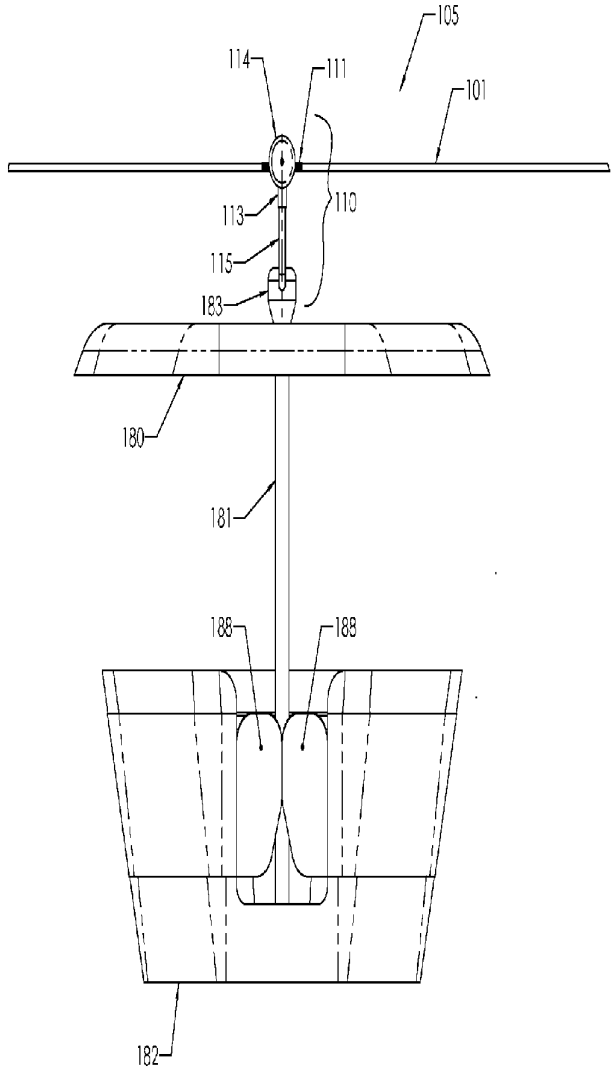
105
114
111
101
113
110
115
183
180
181
188
188
182

FIG. 20

SUSPENDED CABLE AMUSEMENT RIDE

CROSS REFERENCE APPLICATIONS

[0001] This application is a non-provisional application claiming the benefit of provisional application No. 61/151,919 filed Feb. 12, 2009.

BACKGROUND

[0002] Amusement rides are well known in the art. The amusement ride industry has seen an increasing growth in what are called thrill rides, rides that provide the appearance of danger to the rider. Rides such as swing rides, sling shot rides and bungee jumps are among the many thrill rides currently known. The safety of the rider is always a primary concern, and always constrains the design of rides. Other concerns include cost of installation and maintenance, the size of the footprint (space needed on the ground) and number of riders that can use the ride in a given interval of time. Various types of cable supported rides are well known, including ski lifts and other similar rides. Cable rides are generally not considered suitable for thrill rides because of the difficulties of moving the rider at the speeds necessary for a thrill ride while being able to make sharp turns also considered desirable in a thrill ride.

[0003] The foregoing examples of the related art and limitations related therewith are intended to be illustrative and not exclusive. Other limitations of the related art will become apparent to those of skill in the art upon a reading of the specification and a study of the drawings.

SUMMARY

[0004] An aspect of the amusement ride disclosed is to provide a cable supported ride that is suitable for use as a thrill ride.

[0005] The following embodiments and aspects thereof are described and illustrated in conjunction with systems, tool and methods which are meant to be exemplary and illustrative, not limiting in scope. In various embodiments, one or more of the above described problems have been reduced or eliminated, while other embodiments are directed to other improvements.

[0006] The amusement ride is a suspended cable loop that has a means for conveying multiple riders in a generally front down prone position. The riders are suspended from cables, and are not on a rigid rider conveyance. To ensure rider safety there are a number of means to reduce and/or limit the amount of sway and/or twisting that the rides can experience.

[0007] A second embodiment of the amusement ride is a people mover type ride using the turning beam drive assembly.

[0008] Another embodiment is a means of suspending a rider from attachment locations that act to dampen the sway experienced by the rider caused by the motion of the ride.

[0009] In addition to the exemplary aspects and embodiments described above, further aspects and embodiments will become apparent by reference to the accompanying drawings forming a part of this specification wherein like reference characters designate corresponding parts in the several views.

BRIEF DESCRIPTION OF THE DRAWINGS

[0010] FIG. **1** is a top perspective view of the suspended rider cable lift.

[0011] FIG. **2** is a top perspective view of the rider loading/unloading area.

[0012] FIG. **3** is a side elevation view of a grip hanger and riders.

[0013] FIG. **4** is a top perspective view of a rider train.

[0014] FIG. **5** is a side elevation view of a segment of the rider train.

[0015] FIG. **6** is a perspective view of a suspension tower with a turning beam assembly.

[0016] FIG. **7** is a cut away of the tension screw assembly.

[0017] FIG. **8** is a top perspective view of a turning beam drive assembly.

[0018] FIG. **9** is a detail view of the circle **9-9** of FIG. **8**.

[0019] FIG. **10** is a cut away of the sheave drive assembly taken along line **10-10** of FIG. **8**.

[0020] FIG. **11** is a cross sectional view of the supporting sheave assembly taken along line **11-11** of FIG. **8**.

[0021] FIG. **12** is a top perspective view of a turning beam assembly.

[0022] FIG. **13** is a bottom perspective view of a segment of a turning beam assembly.

[0023] FIG. **14** is a side elevation view of a train with a banner.

[0024] FIG. **15** is a table of speed of the rider and the g forces achieved in a 90 degree turn.

[0025] FIG. **16** is a top perspective view of a second embodiment of the ride.

[0026] FIG. **17** is a top perspective view of the loading area of the second embodiment.

[0027] FIG. **18** is a top perspective view of the rider carriage.

[0028] FIG. **19** is a side elevation view of the rider carriage.

[0029] FIG. **20** is a side elevation view of the rider carriage.

[0030] Before explaining the disclosed embodiment of the present invention in detail, it is to be understood that the invention is not limited in its application to the details of the particular arrangement shown, since the invention is capable of other embodiments. Exemplary embodiments are illustrated in referenced figures of the drawings. It is intended that the embodiments and figures disclosed herein are to be considered illustrative rather than limiting. Also, the terminology used herein is for the purpose of description and not of limitation.

DETAILED DESCRIPTION OF THE DRAWINGS

[0031] FIG. **1** is a top perspective view of a suspended rider cable lift **100**. A cable **101** is suspended in the air from towers **102**. The cable **101** is a continuous loop that can be between 150 meters and 7600 meters long. The real limit on the length of the cable **101** is the strength of the cable and not any limitations on the other elements of the ride. In the depicted embodiment the loop is about 480 meters long. The towers can vary in height between 6 and 60 meters tall. In the depicted embodiment the towers range in height between 6 meters and 20 meters. The cable **101** is supported and guided by turning beam assemblies **103** attached to the towers **102** by suspension cables **104**. Riders R are carried on a flyer train **105** in a generally front down orientation in the depicted embodiment. If desired the riders could be sitting in a seat or swing type device (not shown). In order to make it easier to load the riders on flyer train **105**, it may be desirable to have two towers **102** be shorter than the other towers **102** to bring the flyer train **105** closer the ground at loading area **106**. In

some installations, this may not be desired. Maximum distance between the towers is dependent on the height of the towers and the terrain.

[0032] Power for the driving of the cable, and therefore the ride, is provided by turning beam drive assembly **123**. In the depicted embodiment, the turning beam drive assembly **123** is located on the tower **102** directly in front of the loading area. It is not necessary that the turning beam drive assembly **123** is located next to the loading area **106**; it could be located anywhere on the route of the ride. In installations with a longer cable **101** or with large changes in elevation, it may be desirable to have more than one turning beam drive assembly **123**. If more than one turning beam drive assembly **123** is used, then there would need to be a means of synchronizing the control of the turning beam drive assemblies **123** to each other so that the cable **101** is not put under too much strain. The turning beam assembly **103** can be configured to turn the cable **101** between 0 to 180 degrees or any specific degree of turn in between. Using the turning beam of the present disclosure it is possible to turn the cable **101** any chosen amount between 0 and 180 degrees, unlike with standard bull wheel type rides. As seen in FIG. **1**, a range of height of the towers **102** and a number of turning beam assemblies **103** with differing degrees of turn can be used to lay out different shaped and sized ride paths and to clear obstacles.

[0033] If desired a second train **129** could be provided on the opposite side of the cable loop from the rider train **105** to counter balance the weight. The train **129** could carry a banner **128** that advertises the ride, or any other announcement desired by the operator of the ride. The banner **128** could be a fabric type device, a rigid sign or electronic display device, as desired, as shown in FIG. **14**.

[0034] FIG. **2** is a perspective view of one embodiment of a loading area **106**. A queue guide **107** is provided to organize and guide the line of people waiting to ride on the suspended rider cable lift **100**. The design of such queue guides **107** to ensure safety and minimize customer dissatisfaction with wait times is well known and will not be further discussed here. In the disclosed embodiment the queue guide **107** leads to a hydraulic scissor lift **108** to lower and lift a loading platform **109** with riders R on it up to be loaded on to the rider train **105** of the suspended rider cable lift **100**. The hydraulic scissor lift **108** can then be lowered out of the way to ensure the riders R can be moved without hitting the loading platform **109**. The use of the lifting loading platform **109** ensures that the riders R are always well clear of the ground when the ride is moving. Other methods of lifting the loading platform **109** can be used as well. Also, other methods of designing a loading platform **109** to allow the riders R to be loaded on the rider train **105** and then have the loading platform **109** move out of the way are possible as well and are considered within the scope of this disclosure.

[0035] FIG. **3** is a side elevation view of a hanger **110** that forms the attachment of the rider train **105** to the cable **101** and is the attachment location for the rigging for the riders R. The hangers **110** are fixedly attached to the cable **101** via a T section **111** of arm **112** in by inserting the T section into the braided cable in a known manner in the depicted embodiment. The arm **112** is attached to housing **113**. A guide wheel **114** is rotatably attached to the housing **113** on the opposite side from arm **112**. A suspension arm **115** extends from the housing **113** to below the cable **101**. An attachment location **116** is at the bottom of the suspension arm **115**. The hanger **110** is designed so that the attachment location is directly aligned with the T section **111** and the cable **101** to prevent the weight of the rider R from rotating the cable **101**. When the ride is at rest, this places the attachment location **116** is directly below the cable **101**, as seen in FIG. **3**. Some swaying would be expected during use. The suspension arm **115** is bowed out to ensure that the hanger **110** does not come into contact with the sheave wheels discussed below. The exact amount of bowing will depend on the particular application in use. No limitation to the depicted embodiment should be inferred. In the disclosed embodiment the hanger **110** is forged steel, with T section **111**, arm **112** and suspension arm **115** all being formed from a single piece of forged steel and the housing **113** being forged onto the single piece, however any material and/or manufacturing method with the necessary material characteristics could be used as well. The hanger **110** has a height H**1** from T section **111** to attachment location **116**. In the depicted embodiment H**1** is 84 cm, however other sizes will work as well, as long as the a hanger **110** is long enough to ensure that none of the rider rigging or the bodies of the riders could get caught up in the turning beam assembly **103** and the turning beam drive assemblies **123**.

[0036] Referring next to FIGS. **4** and **5**, a rider train **105** supports the riders R on the hangers **110**. Multiple hangers **110** are attached to the cable **101** a given distance D**1** apart. In the depicted embodiment D**1** is about 3.7 meters to ensure that the riders R cannot come into contact with each other. Other distances could be used as well, so long as safety considerations are met. Rider supports **117** are attached to the attachment location **116** of the hanger **110** and have a length of D**2**. D**2** is 1.8 meters in the depicted embodiment. In the depicted embodiment rider supports **117** are substantially rigid rods. Stiff cables and other material could be used as well. The rider supports **117** function to reduce any forward and backward (relative to the direction of travel of the rider R) sway of the rider R and to tie the riders R in the rider train **105** together to prevent to much strain on the cable **101** being caused by each rider R being able to sway individually when the riders R are coming out of a turn.

[0037] A platform **118** is suspended between two hangers **110** by rider supports **117** at height H**2** from the attachment location **116** to the center line of the platform **118**. H**2** is about 60 cm in the depicted embodiment. If desired, the platform **118** can have extra mass to act as a counterweight to further dampen the motion of the riders R. This attachment to two hangers **110** provides both additional safety and allows for the damping effects described herein. The length of the rider supports **117** is determined by the distance D**1** between the hangers **110** and the desired sway of the riders R. The longer D**2** is for a given distance D**1**, the larger height H**2** is and the more sway that is experienced by the riders R. Riders R are attached at height H**3** below the platform **118** on straps **119** attached to a flight suit **120** at at least two locations at the neck and base of the spine of the rider R to prevent twisting of the rider R. In the depicted embodiment straps **119** are made of webbing. H**3** is about 60 cm in the depicted embodiment. Height H**3** can be varied as well to increase or decrease the amount of sway that the riders R can experience. The flight suits **120** in the depicted embodiment are a modified hang gliding suit with the two attachment locations, such as are used on Skycoaster® amusement rides and other similar flight rides. Between one to three riders R can be attached to a platform **118**. For safety reasons, it is probably desirable to make it difficult for the riders to detach themselves from straps **119**. This could be done in a number of ways, including

locking attachments or other means known in the art. The entire rigging from the attachment point **116** downward acts in a manner to control the sway of the rider R. This limits the sway of the riders R to a safe level. The rigging could be used to suspend a rider beneath a standard roller coaster rider carriage if desired for an additional type of amusement ride.

[0038] The cable **101** is held in the air by towers **102**, as shown in FIG. **6**. The towers **102** are anchored and stabilized by stabilizing cables **121** to hold the towers **102** vertical against the weight and tension of the cable **101** and the forces generated by the operation of the ride. The tower **102** has a tension jack screw assembly **122** mounted near the top of the tower **102**. Access ladders **124** are provided to allow for maintenance. Tension cables **104** are attached to a turning beam assembly **103** which support and turn the cable **101**. The tension cables **104** also function to ensure that the turning beam assemblies **103** and turning beam drive assemblies **123** are at a safe distance from the towers **102** such that the riders R or other parts of the ride do not come into contact with the towers **102** in operation. In the depicted embodiment the turning beam assemblies **103** and the turning beam drive assemblies **123** are about 5 meters from the towers **102**. The horizontal tension between the towers and the cable loop tensions the entire system, like stretching a rubber band with the fingers of both hands. Not only does this provide stiffness to the entire system, but the jack screws then provide a simple, economical way to tension the cable.

[0039] FIG. **7** is a cut away view of the tension jack screw assembly **122**. The tension cables **104** are attached to the jack screw **126** inside housing **125**. The jack screw **126** allows ride operators to shorten the tension cables **104**, thereby tightening cable **101** to compensate for stretch of the cable **101** over time. In some installations an automatic system to adjust the length of the tension cables **104** could be used as well. The jack screws **106** also make installation of the cable **101** easier, as exact tolerances are not required. Cap **187** can be provided to provide a streamline appearance. If desired the tower **102** could extend farther up to allow for lights, signage or both.

[0040] A turning beam drive assembly **123** with a 90 degree turn in the direction of travel of the cable is seen in FIG. **8**. The cable approaching the turning beam drive assembly and the cable departing therefrom together define a first plane associated with the turning beam drive assembly. A turning beam **130** is the spine of the turning beam drive assembly **123**. Brackets **131** are mounted along the inner curve of the bend of the turning beam **130**. The length of the turning beam **130** is determined by the speed of the ride and the degree of turn desired. The faster the cable **101** is traveling at maximum speed, the more gradual any turn has to be, therefore the longer the turning beam **130** needs to be. The brackets **131** hold sheave drive assemblies **132**. Each sheave drive assembly **132** has a sheave wheel **133** and a motor **134** to drive the sheave wheel **133** in the depicted embodiment. It is not necessary that every sheave wheel **133** be driven by a motor **134** in order for the turning beam drive assembly **123** to function. In the depicted embodiment, a 3 horsepower motor is used. In the depicted embodiment the sheave wheel has a 56 cm diameter and there are 15 sheave drive assemblies **132**.

[0041] References to horizontal and vertical refer the orientation as shown in FIG. **10**. No limitation should be inferred from the use of the terms horizontal or vertical in describing elements of the turning beams. In use the turning beam drive assembly **123** may be at an angle from horizontal due to the pull of the cables and the forces involved in the operation of the ride. With the sheave wheel **133** of the depicted embodiment 6 degrees of turn per sheave wheel **133** is obtained. For the turning beam drive assembly **123** to function well about at least a 90 degree turn is desired to ensure there is sufficient friction on the cable **101**. A lower degree of turn may result in slippage of the sheave wheels **133** along cable **101**. The turning beam drive assembly **123** can have an up to 180 degree of turn.

[0042] The small size of the sheave wheels **133** allows the sheave wheels **133** turn at a higher rotational velocity as compared with a traditional single bull wheel. The number of smaller sheave wheels **133** also allows multiple smaller motors to be used, rather than the very large motors required with traditional bull wheels. The small sheave wheels **133** also allow the ride to be stopped and started without using the large amounts of energy required to start or stop the huge inertia of large bull wheels of a traditional cable supported ride. The combination of the small motors **134** with the small sheave wheels **133** means that complicated gearing and/or transmissions are not needed. The motor **134** can be attached with a smaller gear assembly to the sheave wheel **133**. Also, the failure of a single motor **134**, or even multiple motors **134**, would not cause the ride **100** to cease all operation. This would allow the riders R to be moved to the loading platform **106** to be removed from the ride **101** without the need for ladders or other evacuation methods used when standard cable rides fail. Also, this makes maintenance and replacement of worn parts much easier, as removing a single sheave wheel **133** would not require that the cable **101** be provided with supplemental support or to be disengaged from the other sheave wheels **133**.

[0043] The depicted embodiment can reach speeds of up to 25 to 60 miles an hour (40.2 to 96.6 kilometers per hour). Based upon calculations, it is believed that riders R will experience G forces in the turns of up to 2.5 G's or more when the ride is going 40 mph (64.4 kph). A table of the calculated values for different speeds and turning radiuses of a 90 degree turn is seen in FIG. **15**. The first set of numbers is for a 20 foot (6 meter) radius turn and the second in for a 23.5 foot (7.2 meter) radius turn. All of the components of the ride will need to be chosen to withstand these forces for repeated operations of the ride.

[0044] FIG. **10** is a cross-section of a sheave drive assembly **132** taken along line **10-10** of FIG. **8**. The sheave wheels **133** have a circumferential groove **136** into which cable **101** fits. The groove **136** needs to be deep and wide enough to prevent the cable **101** from slipping out of the groove **136**. A guide flange **140** is mounted along the inner curve of turning beam **130** under the brackets **131**, as also seen in FIGS. **9** and **13**. The guide flange **140** is substantially parallel to the plane of the sheave wheel **133** in the depicted embodiment. The guide wheel **114** of the hanger **110** runs along the underside guide flange **140** as best seen in FIGS. **10** and **13**. This prevents the hanger **110** from swaying out too much with the force of the turn due to centrifugal force. This keeps the attachment point **116** substantially under the cable **101** during turns. Only the rider supports **117**, platform **118** and the straps **119** allow the rider R to sway from side to side in the depicted embodiments.

[0045] At each end of the turning beam assembly **103** and turning beam drive assembly **123** is a supporting sheave assembly **135**, seen in FIGS. **8** and **9** and in a cross section in FIG. **11**. The sheave drive assemblies **132** drive the cable **102** around the curve and the supporting sheave assemblies **135** hold the cable **101** up against gravity in the turning beam

assembly **103** and the turning beam drive assemblies **123**. The supporting sheave assembly **135** is held by bracket **137**. The supporting sheave wheel **133***a* is substantially vertical in relation to the ground. The supporting sheave wheel **133***a* is supporting the cable **101** against the majority of pull of gravity, so a significant deviation from vertical is not possible. The exact amount of deviation from vertical of the supporting sheave wheel **133***a* will depend on the depth of the groove **136** and the speed of the ride in operation. The supporting sheave wheel **133***a* is mounted to the bracket **137** with thrust bearing **138**.

[0046] FIG. **12** is a turning beam assembly **103** with a 48 degree turn. In the turning beam assembly **103** there are no motors. The cable **101** is guided by the turning beam assembly **103** through a desired degree of turn in the direction of the travel of the cable while the cable **101** is supported in the air. The turning beam assembly **103** has brackets **131** and sheave wheels **133**, however thrust bearings **138** hold the sheave wheels **133** in the bracket **131** instead of motors **134**. The turning beam assembly **103** has guide flange **140** for the stabilization of the hanger **110** as with the turning beam drive assembly **123**. A lower degree of turn allows the brackets **131** to be spaced farther apart in the depicted embodiment. A turning beam assembly **103** can have any desired degree of turn up to 180 degrees. All of the turning beam assemblies **103** and the turning beam drive assemblies **123** on a given ride will have to turn the same direction, as otherwise the hanger **110** will run into the sheave wheels **133**. However, a given ride could turn either all to the left, as depicted, or all to the right.

[0047] When the ride is installed is it necessary to ensure that the end of each turning beam **130** is aligned with the end of the next turning beam assembly or turning beam drive assembly to ensure that the cable **101** does not slip off the sheave wheels **133**. The turning beam **130** can also curve up to compensate for the catinary (dip) of the cable between beams. This would form a compound curve of the turning beam **133** to align with the catinary of the cable between beams. The degree of change between any two sheave wheels **133** will depend on the size of the sheave wheels **133** and the maximum speed the cable **101** is designed to be traveling at in a given embodiment. The degrees of change between sheave wheels **133** are limited by the need for cable **101** to stay in the circumferential groove **136** and the strain on the cable **101**. Too much of a difference between the plane of any two adjacent sheave wheels **133** would cause the cable **101** large amounts of strain, which would necessitate more frequent replacement of the cable **101**.

[0048] FIG. **16** is a perspective view of a rider carriage embodiment for the suspended cable amusement ride **200**. The flexibility of the layout of the cable **101** that is allowed by the towers **102**, turning beam drive assembly **123**, and turning beam assemblies **103** could be desirable in more standard cable lift uses, such as ski lifts, aerial viewing rides, people movers or similar types of rides. A rider carriage **205** would be used instead of suspending the riders R as in the other embodiment. A loading platform **206** would be provided to allow the riders R to come up to the level of the rider carriage **205**, or the cable **101** could dip low enough that this is not necessary. The cable could either be moving slow enough (1.6-2.4 kilometer per hour) that riders could walk on to the slowing moving rider carriage **205** and then a ride operator would close and lock door **188** or the cable **101** could be stopped and the ride loaded and unloaded as above. The design of the turning beam drive assembly **123** allows the cable to be easily stopped and started, unlike with standard bull wheel type cable lifts.

[0049] FIG. **17** is a close-up of the loading platform **206** with entrance and exit ramps **208** allowing the riders to load and unload on opposite sides of the platform as is well known in the amusement ride art.

[0050] Referring next to FIGS. **18**, **19** and **20** the rider carriage **205** is attached to the hanger **110**, which is identical to the hanger **110** used in the above embodiment. In some applications a different type of hanger **110** may be desired. The guide wheel **114** may not be needed in all applications if the ride **200** never moves with enough speed to cause the carriage to sway out, but the guide wheel may be desired to prevent wind and/or rider movement from causing too much sway in the turns. The hanger **110** attaches at the center of the top **180** of the rider carriage **205**. It is necessary that the hanger **110** be attached such that the rider carriage **205** hangs level when it is empty/still.

[0051] The rider carriage **205** has a base **182** attached to center poll **181**. Center pole **181** has top **183** which attaches to hanger **110**. The rider carriage **205** has wall **186** with doors **188**, benches **189** around a center pole **181** in the depicted embodiment. It is to be understood that other rider carriage designs could be used with the ride **200**. Also, if desired, the type of rider carriage that detaches from the cable **101** at the loading and unloading station could be used with some modifications to the system.

[0052] If desired a second loading and unloading station **207** could be provided to allow the ride **200** to be used to transport people between two locations as seen in FIG. **16**.

[0053] The above device can be described as a method for use with a cable passing by a sheave assembly having a plurality of sheave wheels disposed in a sequence, a first sheave wheel being substantially coplanar with the cable as it approaches the assembly and a final sheave wheel in the sequence being substantially co-planar with the cable as it departs from the assembly, the cable having a load attached thereto at a point by means of a hanger, the method comprising the steps of:

[0054] passing the point by a first sheave wheel in the sequence;

[0055] passing the point by successive sheave wheels in the sequence;

[0056] passing the point by a last sheave wheel in the sequence;

[0057] whereby the point passes around a curve and is urged outward by centrifugal force;

[0058] wherein the hanger, during the passing steps, is blocked by a guide flange from moving outward in response to the centrifugal force.

The method of above wherein at least two of the sheave wheels are driven each by a respective motor. The method of above wherein the hanger supports a rigging carrying a human passenger, and wherein the rigging, during the passing steps, moves outward in response to the centrifugal force.

[0059] A method for use with a looped cable passing by a plurality of sheave assemblies, each sheave assembly having a respective plurality of sheave wheels disposed in a sequence, the sheave wheels of any particular one of the assemblies substantially coplanar with the cable as it approaches the particular one of the assemblies and with the cable as it departs from the particular one of the assemblies,

the cable having a load attached thereto at a point by means of a hanger, the method comprising the steps of:

[0060] for each of the plurality of sheave assemblies,

[0061] passing the point by a first sheave wheel in the sequence;

[0062] passing the point by successive sheave wheels in the sequence;

[0063] passing the point by a last sheave wheel in the sequence;

[0064] whereby the point passes around a curve and is urged outward by centrifugal force;

[0065] wherein the hanger, during the passing steps, is blocked by a guide flange from moving outward in response to the centrifugal force.

[0066] The method of above wherein on at least one of the sheave assemblies, at least two of the sheave wheels are driven each by a respective motor. The method of above wherein the hanger supports a rigging carrying a human passenger, and wherein the rigging, during the passing steps, moves outward in response to the centrifugal force.

[0067] While a number of exemplary aspects and embodiments have been discussed above, those of skill in the art will recognize certain modifications, permutations, additions and sub-combinations therefor. It is therefore intended that the following appended claims hereinafter introduced are interpreted to include all such modifications, permutations, additions and sub-combinations are within their true sprit and scope. Each apparatus embodiment described herein has numerous equivalents.

[0068] The terms and expressions which have been employed are used as terms of description and not of limitation, and there is no intention in the use of such terms and expressions to exclude any equivalents of the features shown and described or portions thereof, but it is recognized that various modifications are possible within the scope of the invention claimed. Thus, it should be understood that although the present invention has been specifically disclosed by preferred embodiments and optional features, modification and variation of the concepts herein disclosed may be resorted to by those skilled in the art, and that such modifications and variations are considered to be within the scope of this invention as defined by the appended claims. Whenever a range is given in the specification, all intermediate ranges and subranges, as well as all individual values included in the ranges given, are intended to be included in the disclosure.

[0069] In general the terms and phrases used herein have their art-recognized meaning, which can be found by reference to standard texts, journal references and contexts known to those skilled in the art. The above definitions are provided to clarify their specific use in the context of the invention.

In the claims:

1. A suspended cable ride comprising:

a loop of cable;

at least two towers;

a turning beam drive assembly having a spine supporting a least three sheave wheels functioning to drive the cable at a desired speed around the loop;

at least two of the sheave wheels on the turning beam drive assembly being powered by motors;

at each end of the spine the turning beam drive assembly having a sheave wheel attached at a substantially right angle to the plane of at least one of the sheave wheels, said end sheave wheels supporting the cable against gravity;

a turning beam assembly having a spine supporting at least three sheave wheels;

at each end of the spine the turning beam drive assembly having a supporting sheave wheel attached at a substantially right angle to the plane of at least one of the other sheave wheels, said end sheave wheels supporting the cable against gravity;

at least one of the towers having a turning beam drive assembly attached to the tower at a point above the ground;

the remaining towers having a turning beam assemblies attached to the tower at a point above the ground;

the turning beam drive assembly and the turning beams supporting the cable above the ground; and

at least one rider conveyance holding at least one rider attached to the cable.

2. The apparatus of claim **1** wherein the rider conveyance holds the rider in a generally front-down orientation.

3. The apparatus of claim **2** wherein the rider conveyance further comprises:

at least two hangers attached to the cable, each hanger having a rider attachment point located below the cable a distance H**1**;

the hangers being located a distance D**1** apart on the cable;

at least one rider support attached to each rider attachment point;

a platform attached to two rider supports between to hangers at a distance H**2** below the rider attachment locations; and

a rider attached to the platform by at least one strap such that the rider is a distance H**3** below the platform.

4. The apparatus of claim **1** wherein the turning beam drive assembly further comprises a guide flange cooperating with the hanger to prevent the hanger from moving outward due to centrifugal force.

5. The apparatus of claim **4** wherein the hangers further comprises a wheel that runs along the guide flange.

6. The apparatus of claim **1** a majority of the sheave wheels are powered by motors.

7. The apparatus of claim **1** wherein the turning beam drive assemblies are attached to the tower by a plurality of cables.

8. The apparatus of claim **7** wherein the cables are attached to the tower by a tightening means functioning to allow the length of the cables to be adjusted add tension.

9. The apparatus of claim **8**, wherein the tightening means is a jack screw.

10. The apparatus of claim **1** wherein the turning beam drive assembly turns in a direction of travel of the cable by about 90 degrees.

11. The apparatus of claim **10** wherein the turning beam assembly changes the direction of travel of the cable between 10 and 180 degrees.

12. The apparatus of claim **1** wherein the rider conveyance is a rider carriage which is capable of holding at least two riders.

13. The apparatus of claim **1** wherein the cable is driven at a speed of between 2 to 96 kilometers per hour.

14. An apparatus to suspend a rider beneath a moving point in a manner to dampen the motion experienced by the rider, the apparatus comprising:

at least two hangers attached to a means of moving the rider through the air, each hanger having a rider attachment point located a distance H**1** below the means of moving the rider;

the hangers being located a distance D**1** apart;

at least one rider support attached to each rider attachment point;

a platform attached to two rider supports between to hangers at a distance H**2** below the rider attachment locations; and

a rider attached to the platform by at least one strap such that the rider is a distance H**3** below the platform.

15. The apparatus of claim **14**, wherein the means of moving the rider is a driven cable.

16. The apparatus of claim **14**, wherein the rider is attached to the platform by two straps spaced apart on the rider

17. The apparatus of claim **14** wherein the rider is a in a generally front-down orientation.

18. A method of moving a person through the air comprising:

supporting a loop of cable at a chosen height above ground along a chosen path, the height being chosen to allow a person suspended beneath the cable to move along the chosen path without contacting the ground;

driving the cable such that a chosen point on the cable traverses the chosen path;

the cable being driven in an arc by a multiplicity of sheave wheels mounted on a single beam; and

the cable being supported by supporting sheave wheels mounted at approximately vertical in relation to the pull of gravity.

19. The method of claim **18** further comprising the steps of:

suspending a platform beneath the cable between two hangers attached to the cable;

suspending the person beneath the platform in a generally front down configuration.

20. The method of claim **18** further comprising the steps of providing a rider carriage capable of supporting at least two riders.

21. The method of claim **20** wherein the riders are seated.

22. A method for use with a cable passing by a sheave assembly having a plurality of sheave wheels disposed in a sequence, a first sheave wheel being substantially coplanar with the cable as it approaches the assembly and a final sheave wheel in the sequence being substantially co-planar with the cable as it departs from the assembly, the cable having a load attached thereto at a point by means of a hanger, the method comprising the steps of:

passing the point by a first sheave wheel in the sequence;

passing the point by successive sheave wheels in the sequence;

passing the point by a last sheave wheel in the sequence;

whereby the point passes around a curve and is urged outward by centrifugal force;

wherein the hanger, during the passing steps, is blocked by a guide flange from moving outward in response to the centrifugal force.

23. The method of claim **22** wherein at least two of the sheave wheels are driven each by a respective motor.

24. The method of claim **22** wherein the hanger supports a rigging carrying a human passenger, and wherein the rigging, during the passing steps, moves outward in response to the centrifugal force.

25. A method for use with a looped cable passing by a plurality of sheave assemblies, each sheave assembly having a respective plurality of sheave wheels disposed in a sequence, the sheave wheels of any particular one of the assemblies substantially coplanar with the cable as it approaches the particular one of the assemblies and with the cable as it departs from the particular one of the assemblies, the cable having a load attached thereto at a point by means of a hanger, the method comprising the steps of:

for each of the plurality of sheave assemblies,

passing the point by a first sheave wheel in the sequence;

passing the point by successive sheave wheels in the sequence;

passing the point by a last sheave wheel in the sequence;

whereby the point passes around a curve and is urged outward by centrifugal force;

wherein the hanger, during the passing steps, is blocked by a guide flange from moving outward in response to the centrifugal force.

26. The method of claim **25** wherein on at least one of the sheave assemblies, at least two of the sheave wheels are driven each by a respective motor.

27. The method of claim **25** wherein the hanger supports a rigging carrying a human passenger, and wherein the rigging, during the passing steps, moves outward in response to the centrifugal force.

* * * * *