US 20030173793A1

(19) United States

(12) Patent Application Publication

Stromberg et al.

(10) Pub. No.: US 2003/0173793 A1

(43) Pub. Date: Sep. 18, 2003

(54) TOOL HOLDER

(76) Inventors: **Karl-Otto Stromberg**, Halmstrand (SE); **Hans Hellman**, Huddinge (SE); **Dan Holm**, Tyreso (SE); **Peter Froberg**, Solna (SE)

Correspondence Address:
OPPEDAHL AND LARSON LLP
P O BOX 5068
DILLON, CO 80435-5068 (US)

(21) Appl. No.: **10/277,581**

(22) Filed: **Oct. 21, 2002**

Related U.S. Application Data

(63) Continuation of application No. 09/733,260, filed on Dec. 8, 2000, now Pat. No. 6,467,826, which is a continuation of application No. PCT/SE99/01106, filed on Jun. 18, 1999.

(30) **Foreign Application Priority Data**

Jun. 18, 1999 (SE) 9802192-6

Publication Classification

(51) **Int. Cl.**[7] **B66C 1/00**

(52) **U.S. Cl.** **294/106**

(57) **ABSTRACT**

Device at tool holder (**10**) of the kind comprising an essentially C-shaped frame preferably having a long inner range, which frame at its free shank ends carries said tool, for instance a riveting, a glueing or a welding unit. The holder (**10**) comprises a truss or frame work, which includes an outer and an inner C-shaped frame (**11, 23**) and a number of slewing brackets (**27-32**) connected to these. The frames (**11, 23**) and the slewing brackets (**27-32**) are arranged to form a number of connected triangular sections, which connection points (**18-22, 37**) are designed as intersections or joints. The outer C-shaped frame (**11**) is arranged only to support thrust forces and the inner frame (**23**) thrust and tensile forces and the slewing brackets (**27-32**) substantially tensile forces.

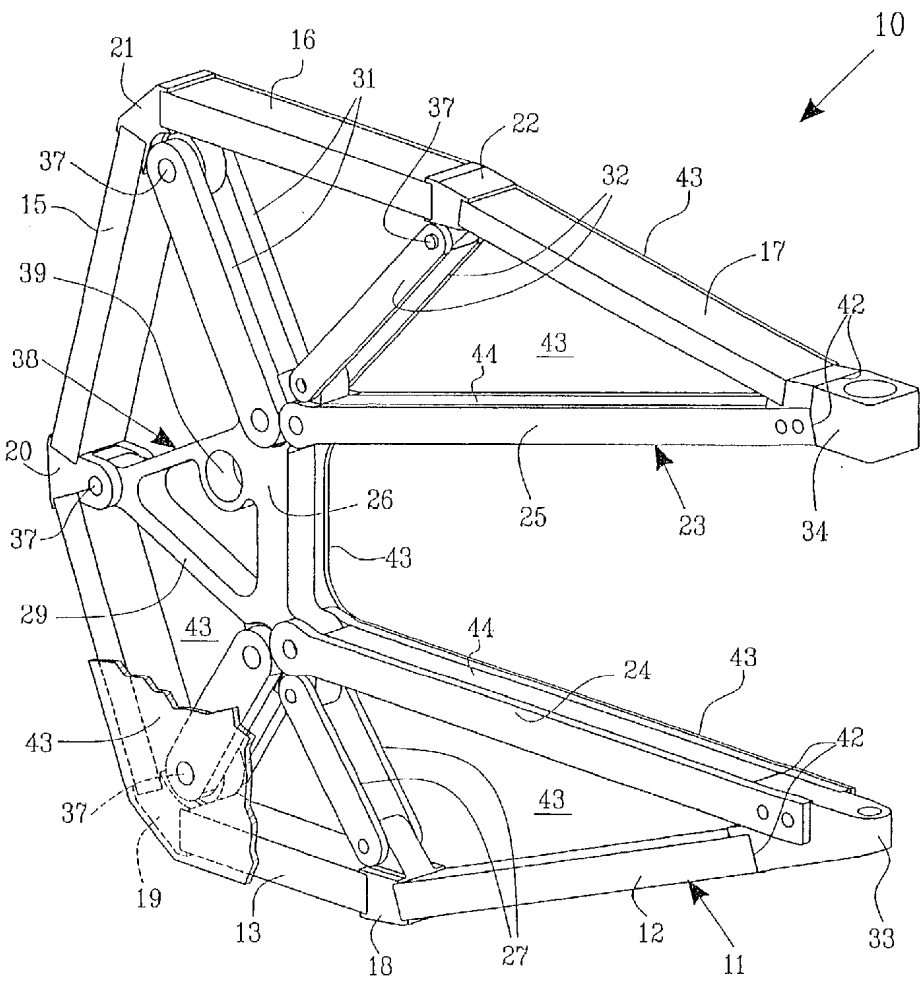

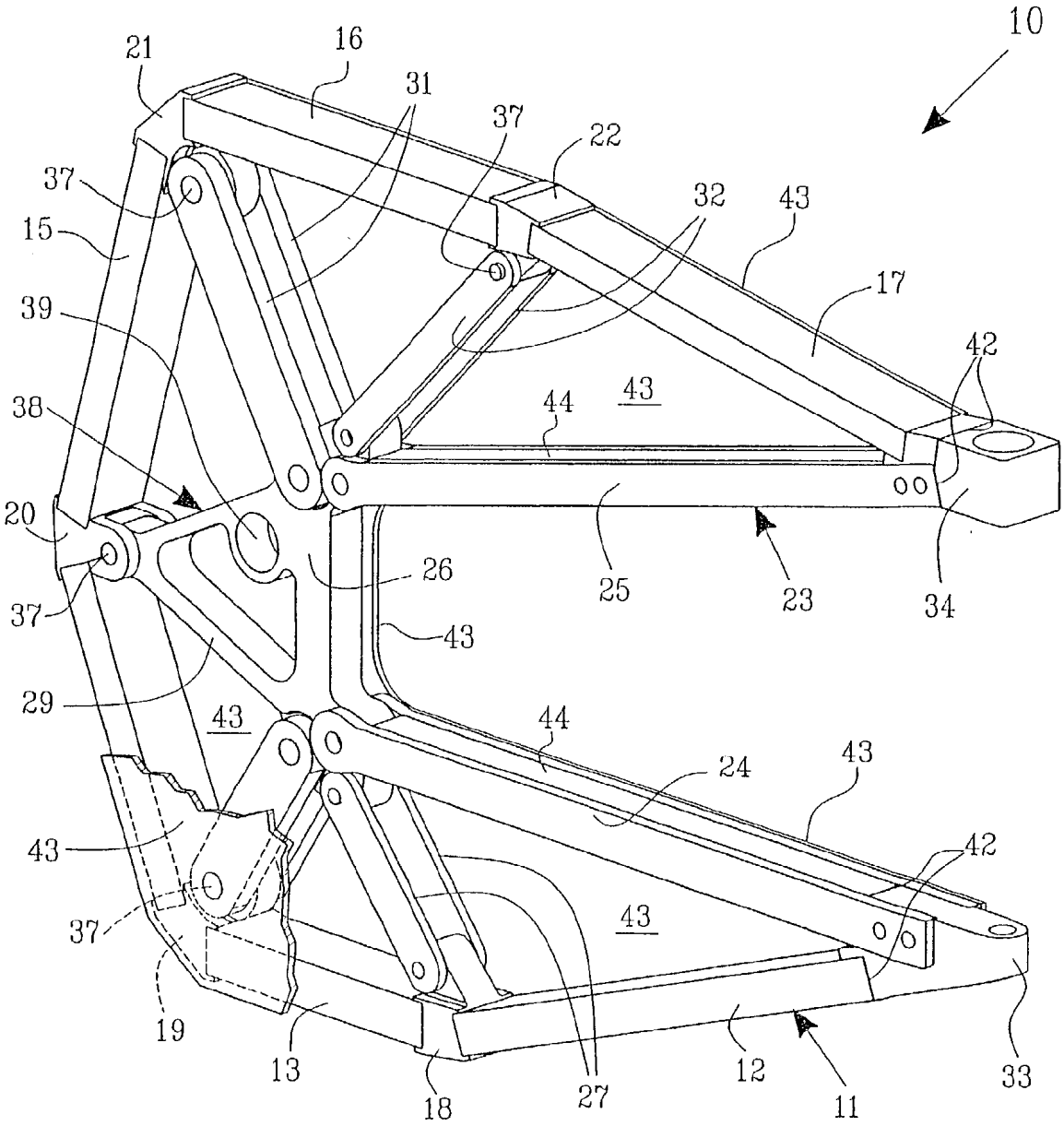
10
21
16
31
37
22
37
32
43
15
17
39
42
44
43
38
20
26
25
23
34
37
43
29
43
44
24
43
43
42
37
43
19
13
18
27
12
11
33

FIG. 1

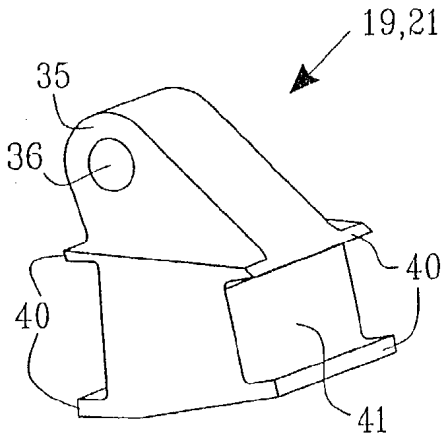

FIG.2

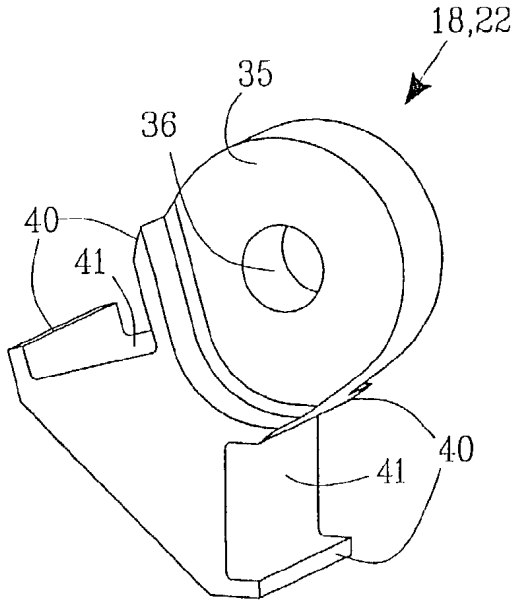

FIG.3

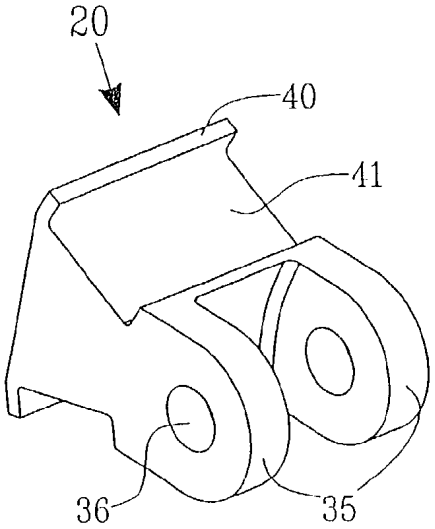

FIG.4

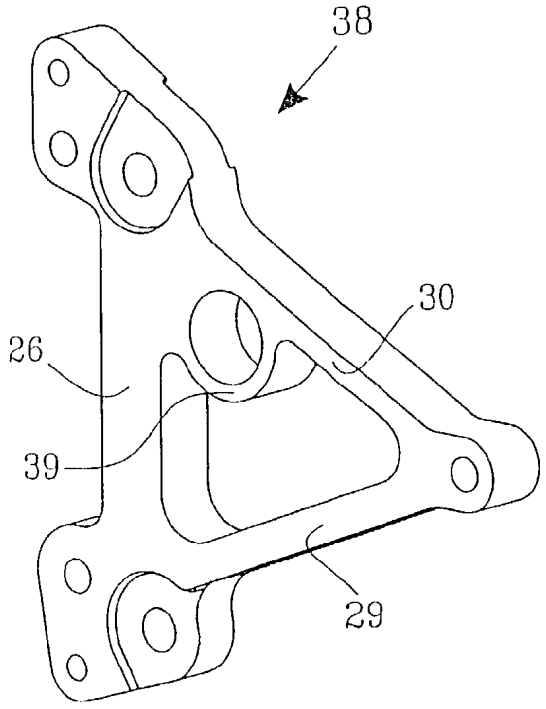

FIG.5

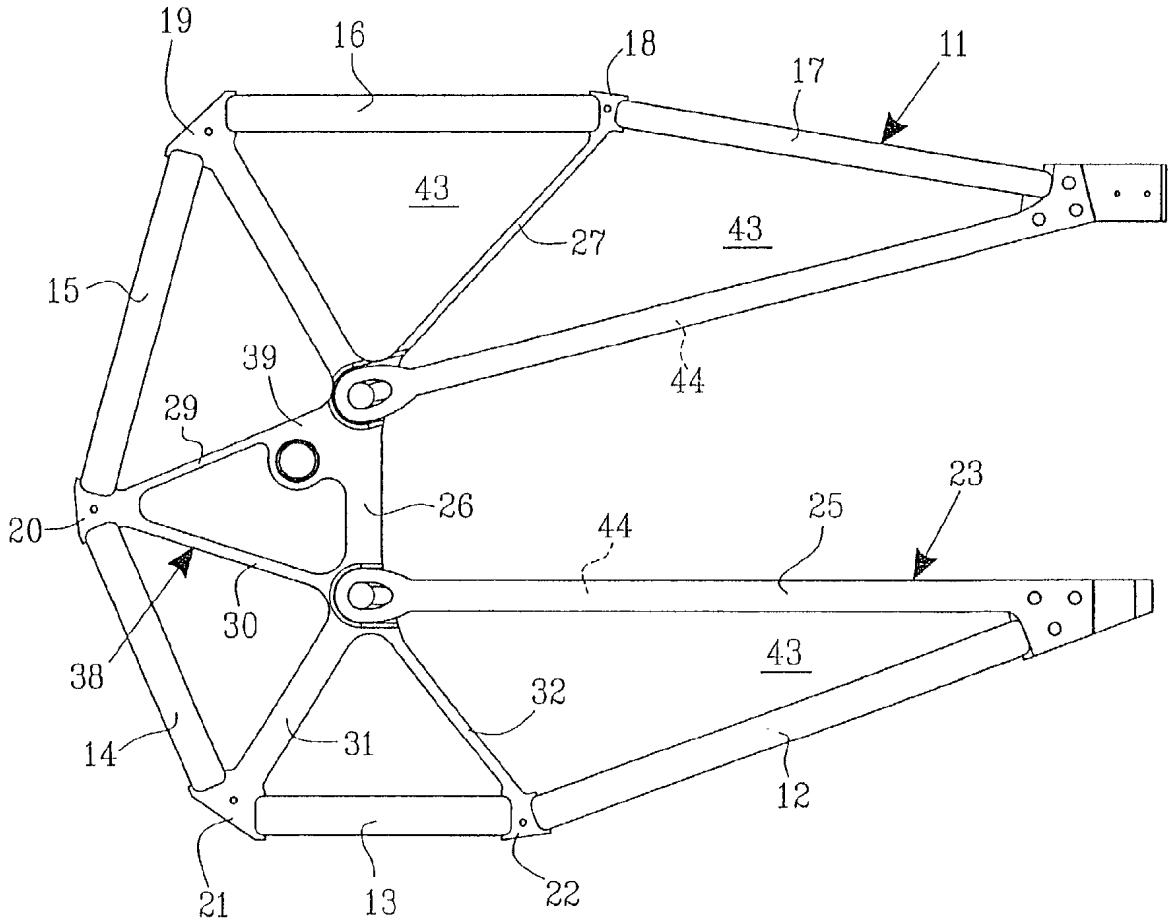
19
16
18
17
11
43
27
43
15
39
44
29
23
26
25
20
44
30
43
38
32
14
31
12
21
13
22

FIG.6

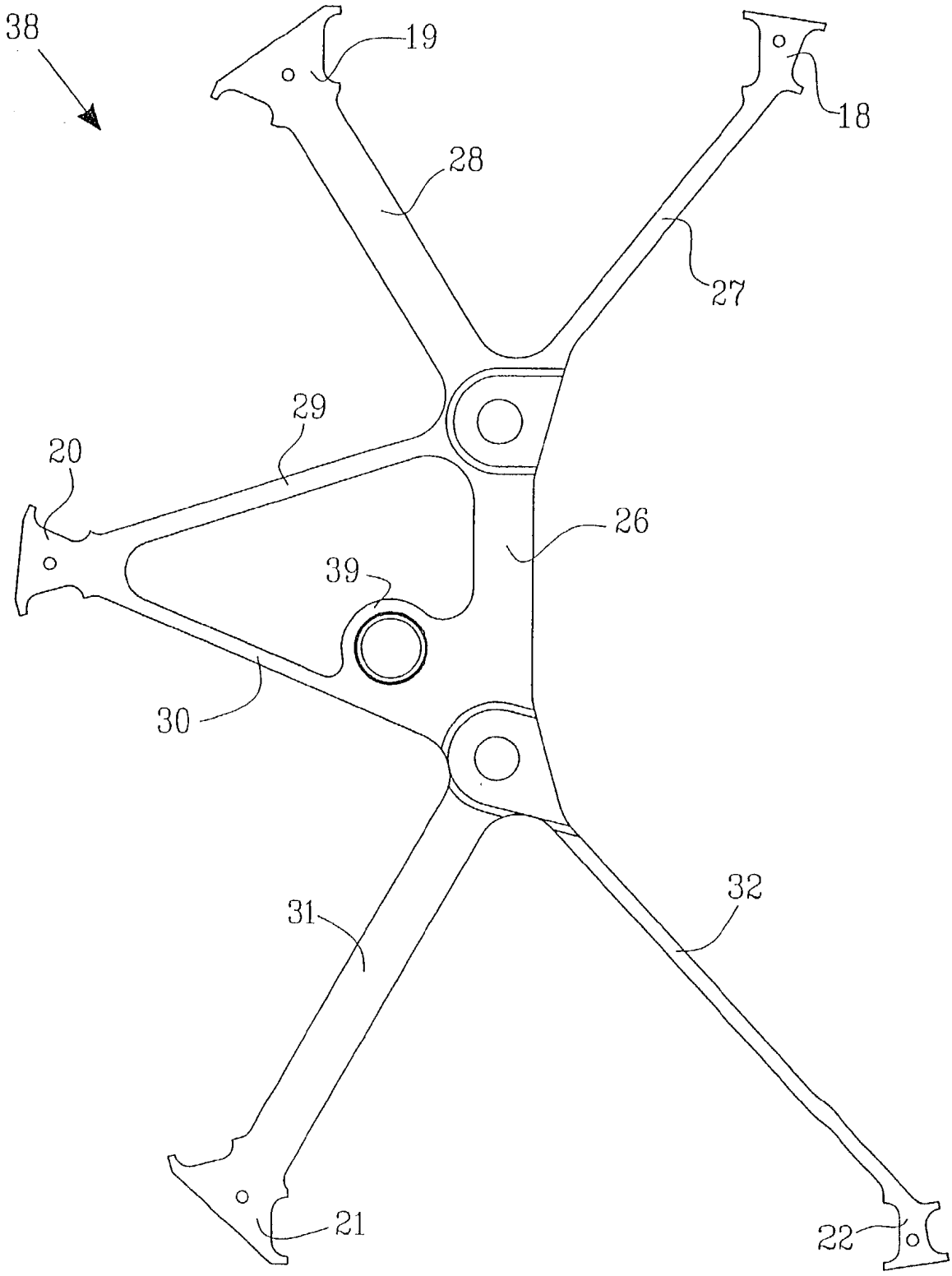

FIG.7

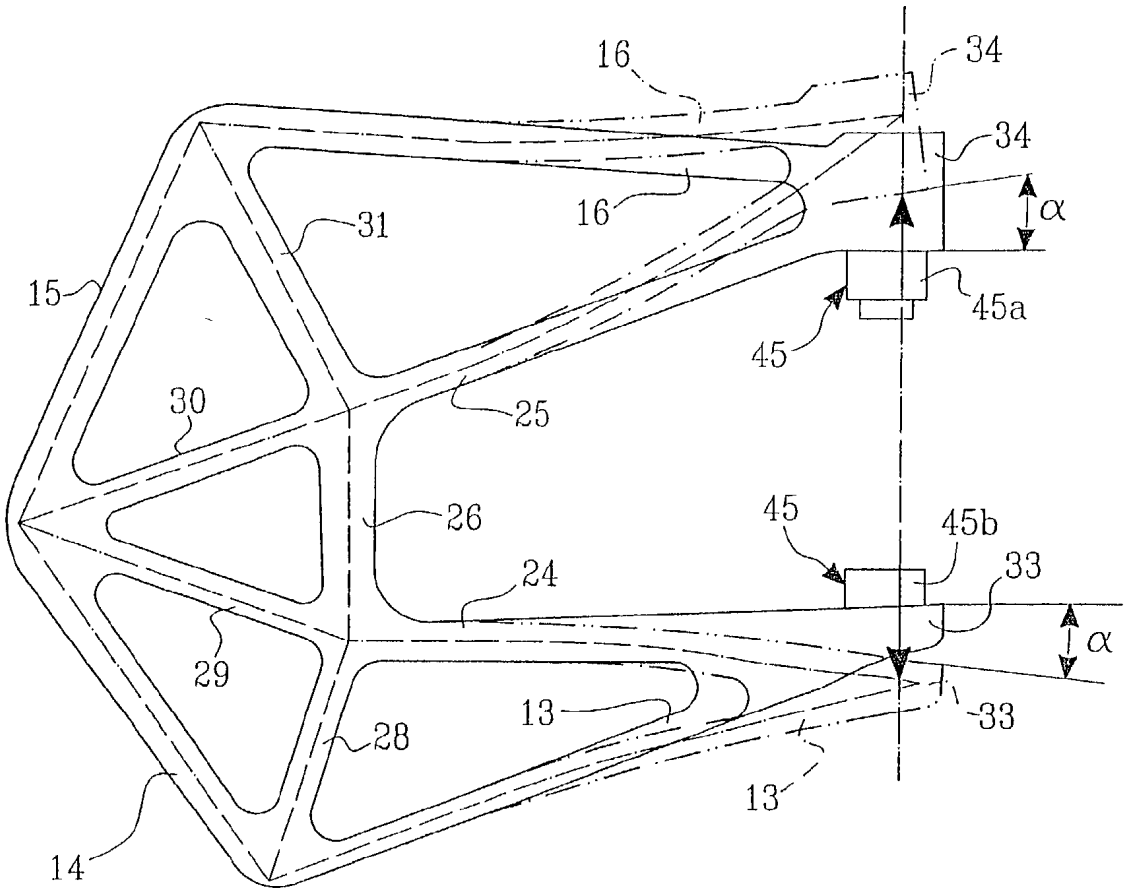

FIG.8

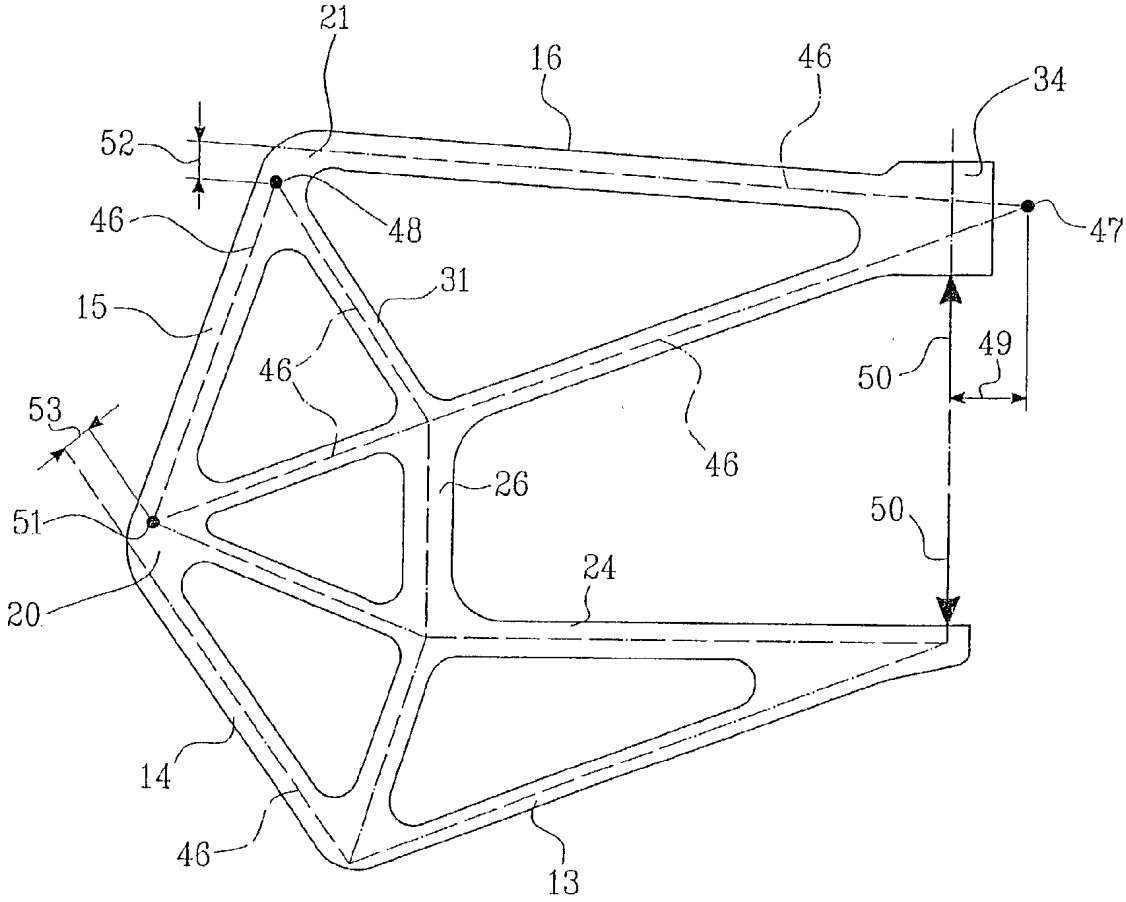

FIG.9

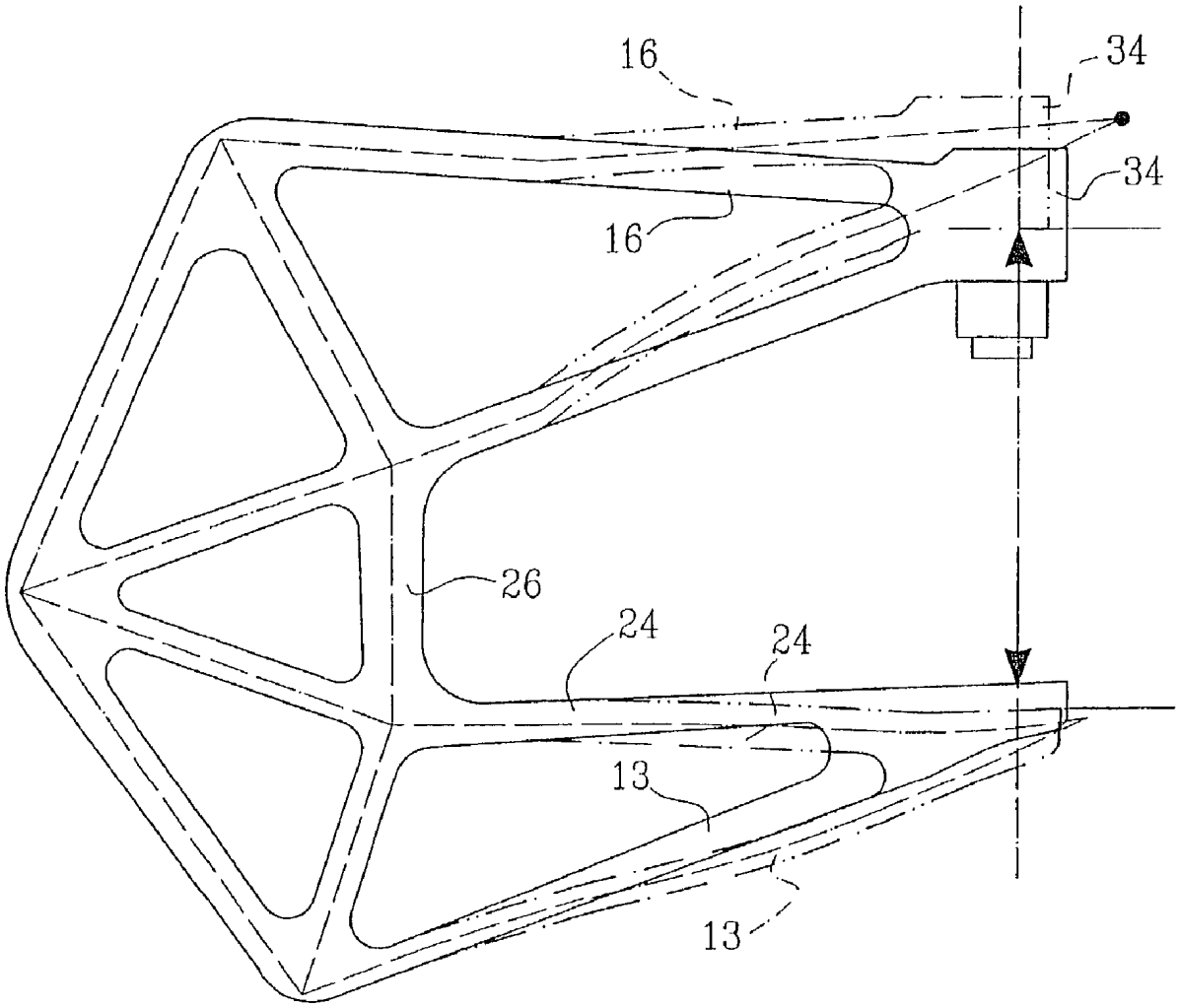

FIG. 10

TOOL HOLDER

[0001] The present invention relates to a device in tool holders and of the kind which comprises a C-shaped frame, has a preferably long inner range, which frame at its free shank ends carries said tool, for example a riveting, a glueing or a welding unit.

THE BACKGROUND OF THE INVENTION AND THE PROBLEM

[0002] C-shaped frames of the above mentioned kind are previously known and are used for joining of for instance car body components, frame works, train cars, air crafts, etc. They are made as I-shaped sections in high tensile steel since high requirements are put on the stiffness and the structural strength of the frame. Particularly when working operations, such as e.g. riveting, is in question, large opening forces arise on the shanks of the C-shaped frame. The frame is also to be exposed to a large number of working cycles and a minimum of 2 millions cycles is a demand. The C-frame must be able to operate on deeply situated parts in certain situations i.e., be able to reach a working area which is situated e.g. 1 metre inside an outer limitation. At large scale production as in the automotive industry the C-shaped too holder is being handled by a robot, which means that the weight of the C-frame should be so low that the total weight of the system is less than the allowed operation weight of the robot. At manual operation it is also desired to minimize the mass of the system.

[0003] Using the robots of today, one has reached and in some cases also exceeded the weight limit, but the market demands both larger and more stable tool holders with maintained or even lowered weight. The investments in robots are so high that it must be possible to use existing ones even for new and more extensive working operations.

[0004] Tests have been made to produce C-shaped frames from composite materials as solid models but the load strains in the intersections in the form, i.a., of shear and tear stresses in the glue joints will become so high, that these tests could not be performed. A typical steel C-frame, having an inner depth of 850 mm, a gap between the ends of the shanks of 400 mm and a calculated load in the form of opposed directed forces of 53 kN, has a weight of about 150 kg at a maximal permitted deflection of 7 mm between the ends of the shanks. This weight together with the weight of the necessary tool equipment exceed the carrying and operating capability of the robot and are therefore not acceptable.

THE OBJECT OF THE INVENTION AND THE SOLUTION OF THE PROBLEM

[0005] The object of the invention is to provide a tool holder, which:

[0006] a. has a low weight,

[0007] b. has a high stiffness,

[0008] c. has a high strength,

[0009] d. has a simple construction,

[0010] e. is price-worthy,

[0011] f. can easily be varied in shape and form,

[0012] g. can operate in difficult environments, e.g., welding sputters,

[0013] h. has a long service life and high reliability.

[0014] These tasks have been solved by the features defined in the claims.

DESCRIPTION OF THE DRAWINGS

[0015] The invention will be closer described below as an embodiment with reference to the enclosed drawings.

[0016] **FIG. 1** shows in perspective a tool holder according to the invention with one front covering plate removed.

[0017] **FIGS. 2 and 3** show two of the intersections also in perspective, more exactly the front, upper and lower intersection respectively and the rear, upper and lower intersection respectively.

[0018] **FIG. 4** shows a rear intersection in perspective.

[0019] **FIG. 5** shows a triangular connecting element in perspective.

[0020] **FIG. 6** shows a side view of a modified tool holder according to the invention.

[0021] **FIG. 7** shows a frame element for the tool holder shown in side view in **FIG. 6**.

[0022] **FIG. 8** shows the tool holder according to **FIG. 1** in a loaded state.

[0023] **FIG. 9** shows an unloaded tool holder according to a modified embodiment.

[0024] **FIG. 10** shows the tool holder according to **FIG. 9** in a loaded state.

DESCRIPTION OF AN EMBODIMENT

[0025] The tool holder according to the invention consists of an outer C-shaped frame **11**, which in turn includes six frame beams **12-17**, of which beams **12**, **13** and **17**, **16** form the shanks of the C and the beams **14** and **15** the intermediate part between the shanks. Beams **12-17** are interconnected end-to-end via intersections **18-22**, so that they together form a C.

[0026] Inside the outer C-shaped frame **11**, is provided a second C-shaped inner frame **23**, comprising the frame beams **24** and **25**, which also form the shanks of the inner frame **23**, while its intermediate part between the shanks consists of beam part **26**.

[0027] The outer and the inner C-frame **11**,**23** are interconnected partly via slewing brackets **27** to **32** and at the end of the shanks via unit attachments **33** and **34**. The intersections **18-22** are designed with connecting ears **35** having a through bore **36** for shaft journal, which form articulated joints **37** for the slewing brackets **27-32**. In the same way the inner connections between the slewing brackets and the inner frame **23** are designed as joints **37**. The beam part **26** and the slewing brackets **29**, **30** are designed as a fixed triangular construction part **38**, at which is provided a holder attachment **39** e.g. for a robot arm (not shown).

[0028] The intersections **18-22** and the unit attachments **33**,**34** are designed with guide flanges **40** and thrust areas **41** for guidance of and pressure transfer to the end part and end

areas **42** respectively of frame beams **12-17**. By angularly adjustment the thrust areas **41** of the intersections, the ends of the frame beams can be cut perpendicularly, which simplifies manufacturing.

[**0029**] The torsional rigidity in the C-shaped frame is suitably obtained by the attachment of stiffening plates **43** at both its flat sides, which suitably are connected to the frame beams **12-17** and **24**, **25** during load subjected to the frame. The connection can be a glue joint, riveted joint or screw joint or the like. The material can be steel, aluminium, fibre reinforced plastic plates or equal.

[**0030**] In early construction work it proved itself that a frame work construction with intersections free from moments for weight reasons was preferred above a construction having moment absorbing intersections. Solutions comprising moment supporting intersections must be made relatively heavy and unwieldy to be able to handle the heavy loads. The key to achieving a light and durable construction showed to be designing the geometry of the frame work thus that all incoming bars to an intersection meet at one common point. The selected geometry resulted in that the C-frame **11** is put together by a number of interconnected triangles, where at least one side of a triangle is shared with the adjacent triangle.

[**0031**] Since the specific stiffness for composite materials exceeds the one for steel, is it desirable to use as high ratio of composite material as possible to minimize the weight for the selected stiffness. The chosen construction principle with essentially moment-free intersections results in that in the outer frame **11** only arises one-axis loads, i.e., compressing strains, whereby composite material is specially suitable for this. As composite material can be used different kinds of reinforced plastic e.g., carbon fibre reinforced plastic, having a specific coefficient of elasticity of about 95 in longitudinal direction compared to about 25 for steel, which means that the carbon fibre frame is almost four times lighter than the corresponding steel flame. Since also combined loads arise in the inner parts of the outer frame and steel is a more cost effective construction material, these parts may suitably be of steel or a combination of steel and carbon fibre reinforced plastic, which in the described embodiment has been selected for the frame beams **24** and **25**, where the inner part of the frame beam is a carbon fibre beam **44** and the outer parts are steel rods. The weight of the whole tool holder are about half the weight of a steel frame having a corresponding performance.

[**0032**] However, this does not exclude, that selected parts of the construction can be replaced of composite material, in case the requirements of lowering the weight and/or stiffness and strength are further increased even more.

[**0033**] In order to optimize the properties of the material the fibres are oriented in the extension of the beams, i.e., longitudinally, which means that the beams can be sawed from carbon reinforced plastic plates and be cut into suitable lengths, whereby the costs for the most expensive parts in the construction can be kept low. The selected construction principle does not require special moulding tools, but permits shell-moulding and modification without large initial costs.

[**0034**] The modified embodiment shown in **FIGS. 6 and 7** differs from the above described in that several joints have been replaced by fixed intersections, but with the maintained requirement, that all connection points are moment-free. By this design it is possible to fixedly connect the slewing brackets **27**, **28**, **31** and **32** to the frame element **38**, as to obtain the appearance shown in **FIG. 7**. The intersections **18-22** are fixedly integrated to the slewing brackets as to reduce the number of associated parts. The frame element **38** is suitably made of metal, for example of steel. The inner frame beam is **24** and **25** are in the same way as before articulately connected to the frame element **38**.

[**0035**] A disadvantage of designing all intersection points free of moments, is that the tool holder is so deformed during a load, see **FIG. 8**, that the connection surfaces of the unit attachments **33**, **34** not remain parallel but will form an angle α with the horizontal plane.

[**0036**] When high requirements are put on the accuracy in the working process, i.e., that both parts of the tool unit **45**, which can be a riveting unit **45***a* and a riveting knob **45***b*, are essentially in alignment during the riveting operation, or in other words that the connection surfaces of the unit attachments **33**, **34** essentially remain parallel, the principle with the moment free intersections or joints can not be established. To be able to control the deformations of the C-shaped tool holder at load, it is suitable that moment is applied into one or more intersections or bars, which is achieved by that the centre line **46** of the incoming rods to an intersection do not meet in a common intersection point. Therefore all intersections will not be moment free.

[**0037**] In **FIG. 9** it is shown how to control the deformation, to achieve certain requirements, e.g., the above mentioned parallelism. In the unit attachment **33** the intersection point **47** of the centre line **46** has been moved outside the attachment **33**, as to induce a moment using the moment arm **49** when for instance a riveting load, as shown by arrows **50**, attacks the unit attachments **33** and **34**.

[**0038**] Further has moment been applied into the intersections **20** and **21**, by displacing the attachment points **48**, **51** of the frame beams **14**, **15**, **16** corresponding to the length of the moment arms **52** and **53**. Thereby the frame beam **16**, **25** and **13**, **24** are deformed axially and through bending. **FIG. 10** gives an example of this, whereby the parallelism of the connection surfaces of the unit attachments **33**, **34** can be maintained.

[**0039**] In this embodiment the stiffening plates **43** are omitted.

[**0040**] The invention is not limited to the embodiment described and shown, but a number of variations are possible within the scope of the claims. Thus, the holder may consist of a larger or smaller number of triangular sections and different constructions of intersection joints are possible.

[**0041**] List of Reference Numerals

[**0042**] **10** tool holder

[**0043**] **11** outer C-frame

[**0044**] **12-17** outer frame beams

[**0045**] **18-22** intersections

[**0046**] **23** inner C-frame

[**0047**] **24,25** inner frame beams

[0048] **26** beam part

[0049] **27-32** slewing brackets

[0050] **33,34** unit attachments

[0051] **35** connecting ears

[0052] **36** boles

[0053] **37** joint/shaft journals

[0054] **38** frame element

[0055] **39** holder attachments

[0056] **40** guide flanges

[0057] **41** thrusts areas

[0058] **42** end areas

[0059] **43** stiffening plate

[0060] **44** carbon fibre beam

[0061] **45** tool unit

[0062] **46***a* riveting unit

[0063] **45***b* riveting knob

[0064] **46** centerline

[0065] **47** 1st intersectional point

[0066] **48** 2nd intersectional point

[0067] **49** moment arm

[0068] **50** force arrows

[0069] **51** 3rd intersectional point

[0070] **52,53** moment arm

1. Device at tool holder **(10)** of the kind comprising a substantially C-shaped frame preferably having a long inner range, which frame at its free shank ends carries said tool, for instance a riveting, an glueing or a welding unit, characterised in,

that the holder **(10)** comprises a truss or frame work, which includes an outer and an inner C-shaped frame **(11, 23)** and a number of slewing brackets **(27-32)** interconnecting these,

that the frames **(11,23)** and the slewing brackets **(27-32)** are arranged to form a number of connected triangular sections, the connection points **(18-22, 37)** of which are designed as intersections or joints, and

that the outer C-shaped frame **(11)** is arranged only to support thrust forces and the inner frame **(23)** thrust and tensile forces and the slewing brackets **(27-32)** substantially tensile forces.

2. Device according to claim 1, characterised in,

that the connection points **(18-22, 37)** are formed as moment free intersections or joints.

3. Device according to claim 1 and **2**, characterised in,

that a stiffening plate **(43)** is attached to the holder **(10)**, on at least one flat side, preferably on both flat sides.

4. Device according to claim 1, characterised in,

that the outer C-shaped frame **(11)** is made of a composite material having a high coefficient of elasticity, preferably carbon fibre reinforced plastic.

5. Device according to claim 1, characterised in,

that the outer C-shaped frame **(11)** consists of a number of rod shaped frame beams **(12-17)** connected to each other via said intersections **(18-22)**, which are designed to guide the ends of the beams laterally.

6. Device according to claim 1, characterised in,

that the shanks **(24, 25)** of the inner C-shaped frame **(23)** are combined of at least one beam of composite material and at least one reinforcement preferably of steel.

7. Device according to claim 1, characterised in,

that the intermediate part **(26)** between the shanks of the inner C-shaped frame **(23)** consists of a triangular frame element **(38)**, in which an attachment **(39)** is arranged for carrying the holder **(10)**.

8. Device according to claim 1, characterised in,

that at least some of the intersections **(18-22)** of the holder **(10)** are designed as moment-free, one-axis joints.

9. Device according to claim 1, characterised in,

each of the free ends of the outer and the inner shank **(11, 23)** are interconnected by means of a unit attachment **(33, 34)**.

10. Device according to claim 1, characterised in,

that the triangular frame element **(38)** is designed with fixedly connected slewing brackets **(27, 28, 31, 32)**, which at their free ends are provided with fixed intersections **(18-22)**.

11. Device according to claim 1, characterised in,

that at load moments are induced in one or more intersections and/or bars, that the centre lines **(46)** through one or more frame beams and/or one or more slewing brackets in an intersection are arranged not to meet in a common intersection point.

* * * * *