US 20020178810A1

(19) United States

(12) Patent Application Publication (10) Pub. No.: US 2002/0178810 A1

Lorenzen (43) Pub. Date: Dec. 5, 2002

(54) ANGULAR POSITION SENSOR

(76) Inventor: David Lorenzen, Breckenridge, CO (US)

Correspondence Address:
OPPEDAHL AND LARSON LLP
P O BOX 5068
DILLON, CO 80435-5068 (US)

(21) Appl. No.: 09/681,113

(22) Filed: Jan. 11, 2001

Publication Classification

(51) Int. Cl.[7] G01F 23/36

(52) U.S. Cl. 73/313; 73/305

(57) ABSTRACT

A liquid level sensor is provided for use with a container. The sensor protrudes through an opening in the container. The sensor includes a float linked by means of a linkage to a first magnet axially rotatable on a first axis. The first magnet has a magnetic moment with a nonzero component at a right angle to the axis. A divider separates the first magnet from a second magnet having a magnetization and axially rotatable on a second axis. The second magnet has a nonzero magnetic moment at a right angle to the second axis. The first and second magnets are juxtaposed in magnetic linkage so that the second magnet is urged to follow the first magnet in rotation. The divider plugs the opening in the container. A magnetic field sensor is positioned to sense axial magnetic field strength at a location offset from the second axis. Importantly, the magnetization of the second magnet gives rise to a sensed magnetic field at the sensor that is nonsinusoidal with respect to an angle of rotation of the second magnet on the second axis, or gives rise to north and south poles separated by more than a half-circle or axial rotation of the second magnet.

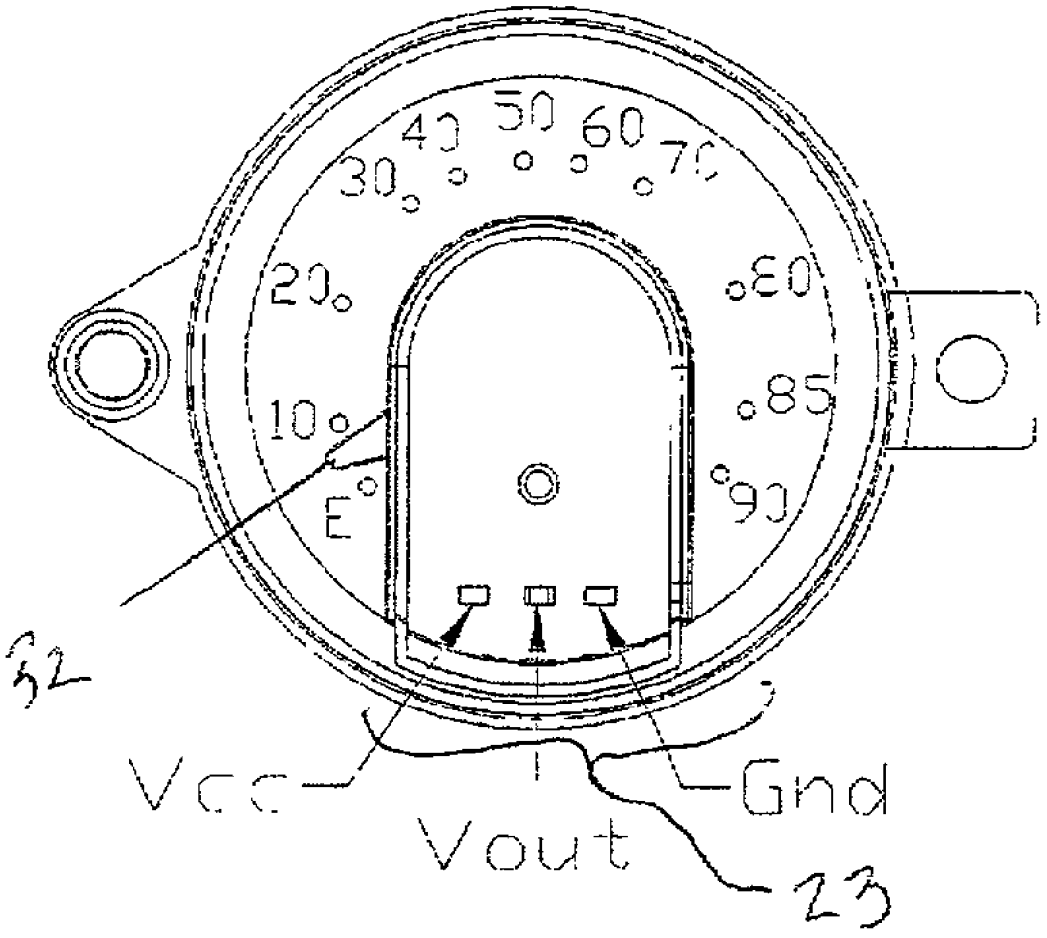

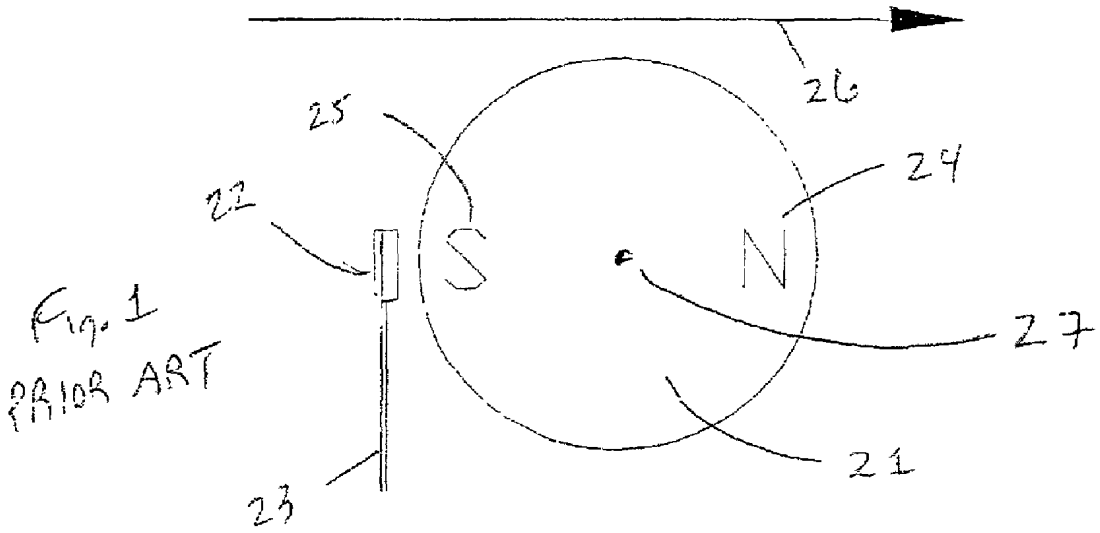

Fig. 1
PRIOR ART

RADIAL DETECTION OF ROUND MAGNET, RADIALLY MAGNETIZED

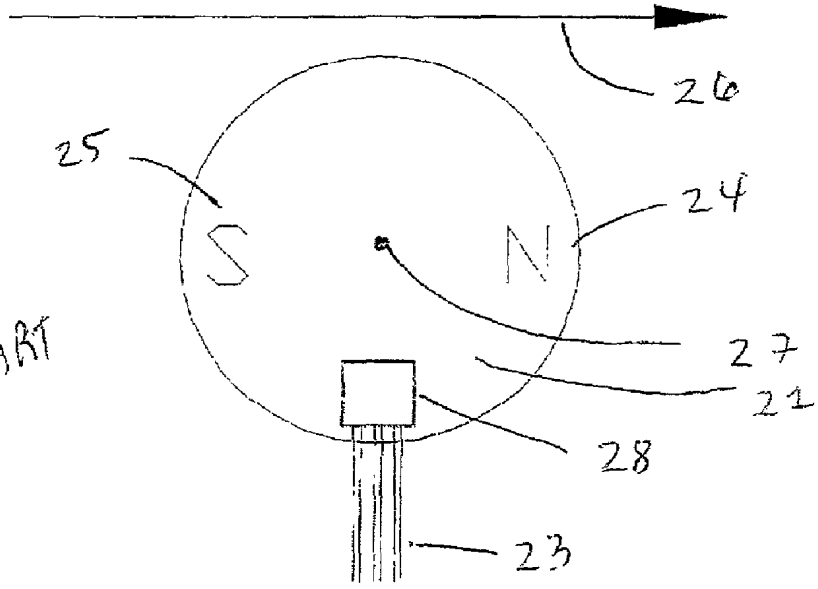

Fig. 2
PRIOR ART

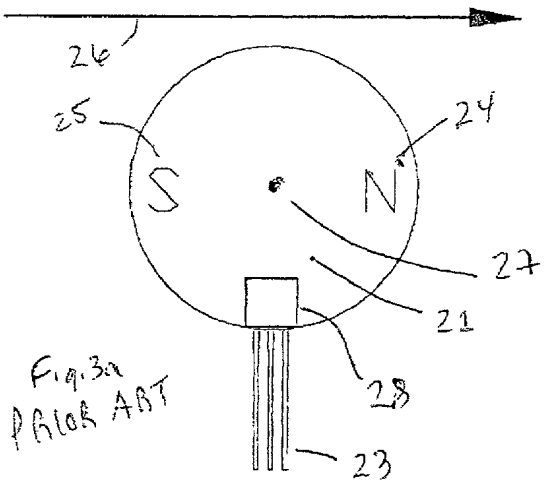

Fig. 3a
PRIOR ART

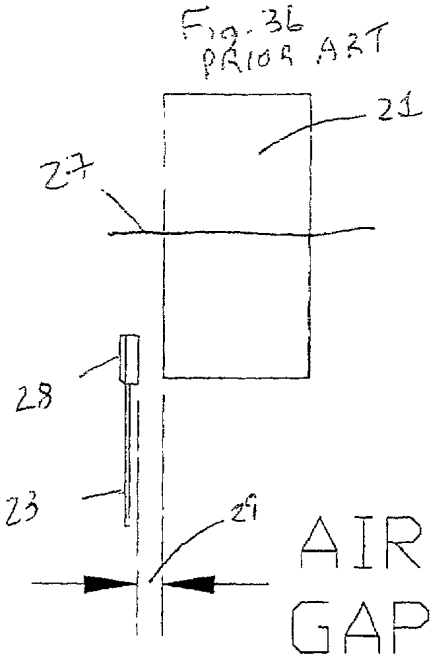

Fig. 3b
PRIOR ART

AXIAL DETECTION OF ROUND MAGNET SHOWING AIR GAP

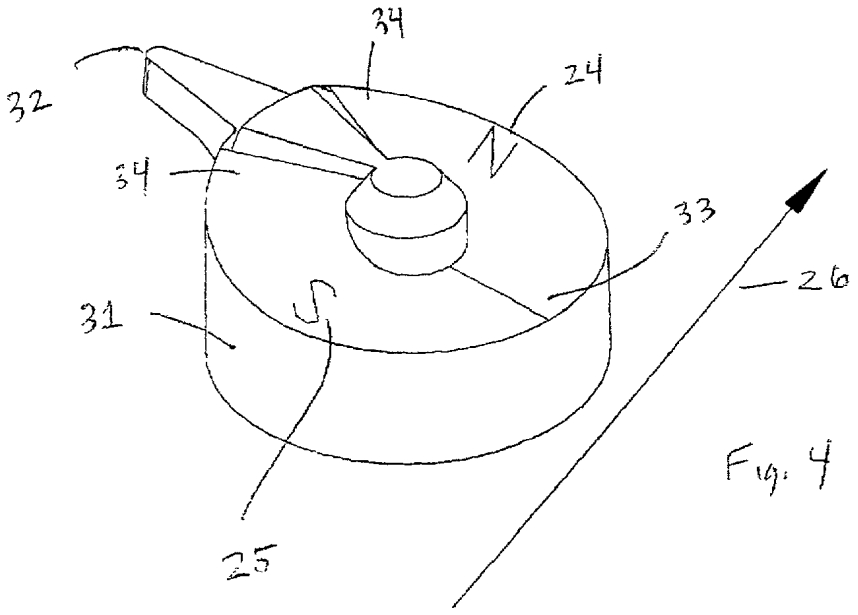

Fig. 4

Fig. 5

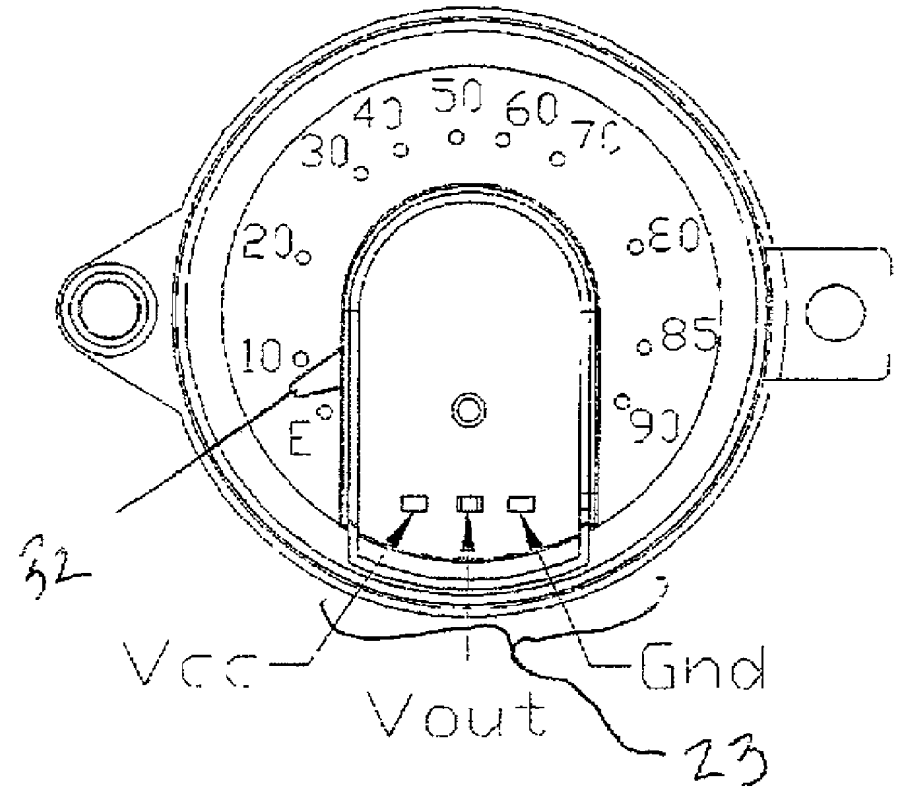

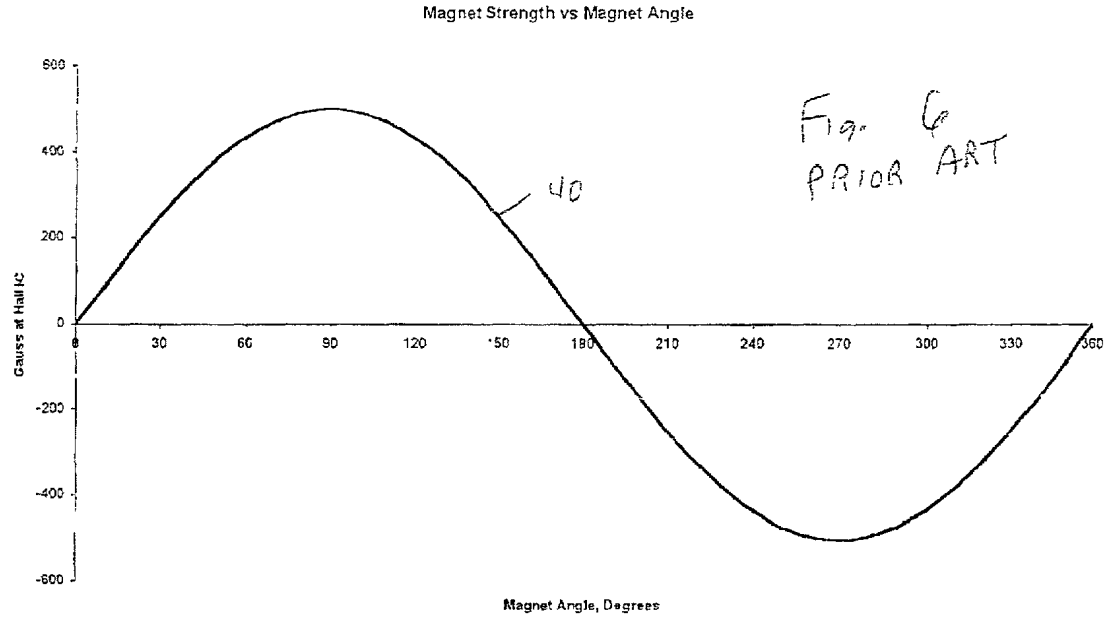

MAGNETIC 'GAUSS' FROM A ROUND MAGNET RADIALLY MAGNETIZED

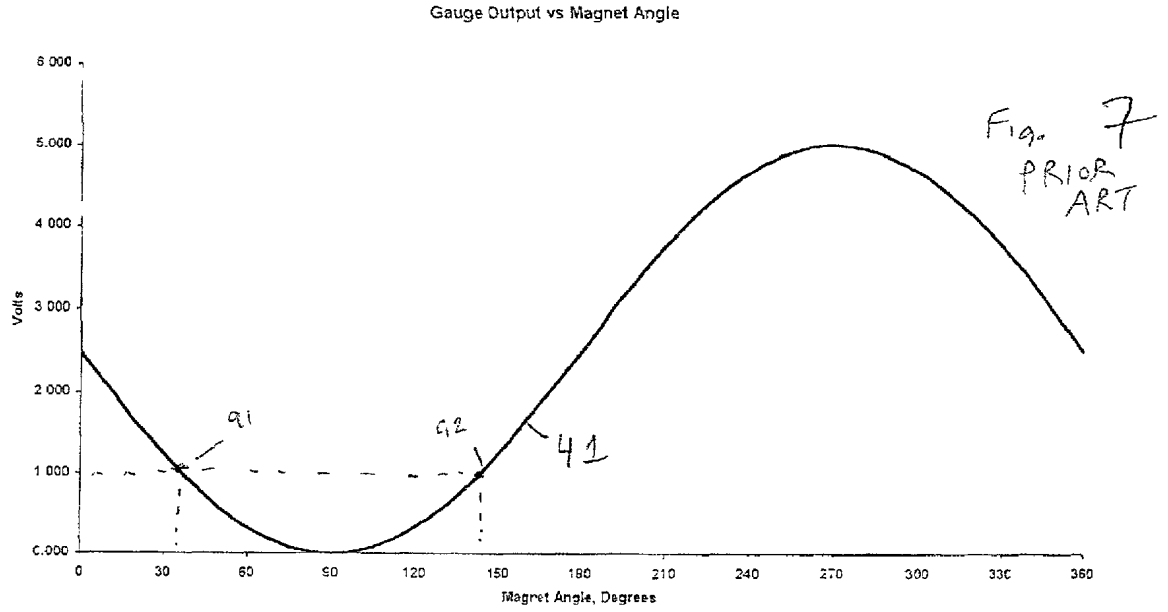

LINEAR HALL IC 'OUTPUT VOLTAGE' FROM A ROUND MAGNET RADIALLY MAGNETIZED, OFFSET = 2.5V (O GAUSS), GAIN = 5mV / GAUSS

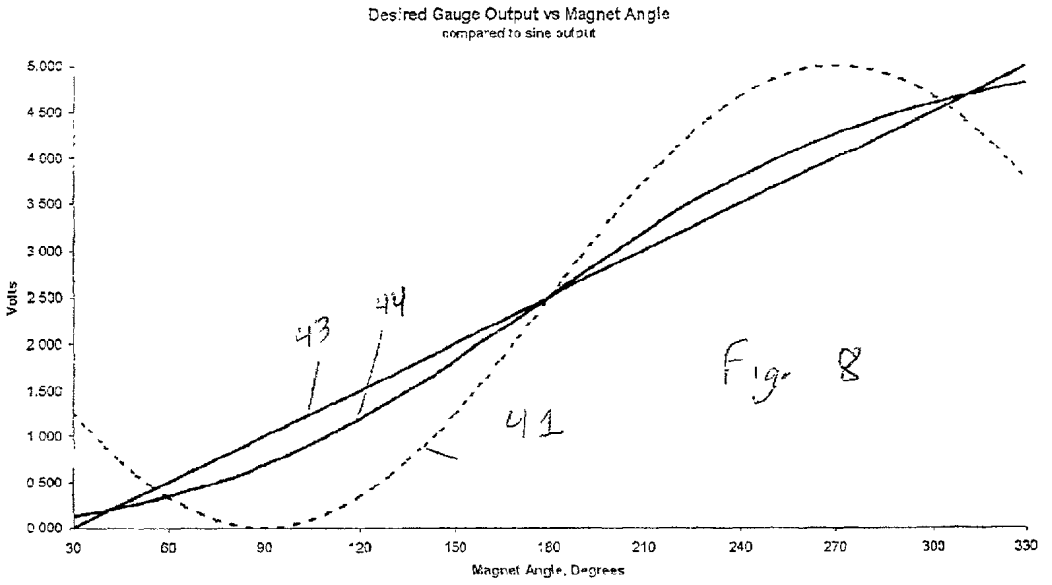

Fig. 8

SINE WAVE OUTPUT SHOWN WITH TARGET CURVES

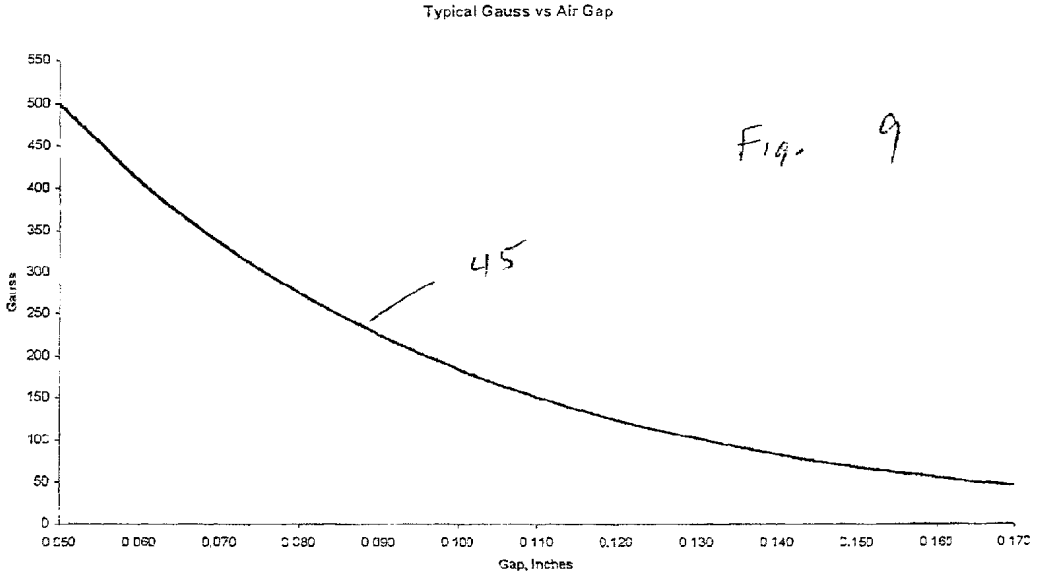

Fig. 9

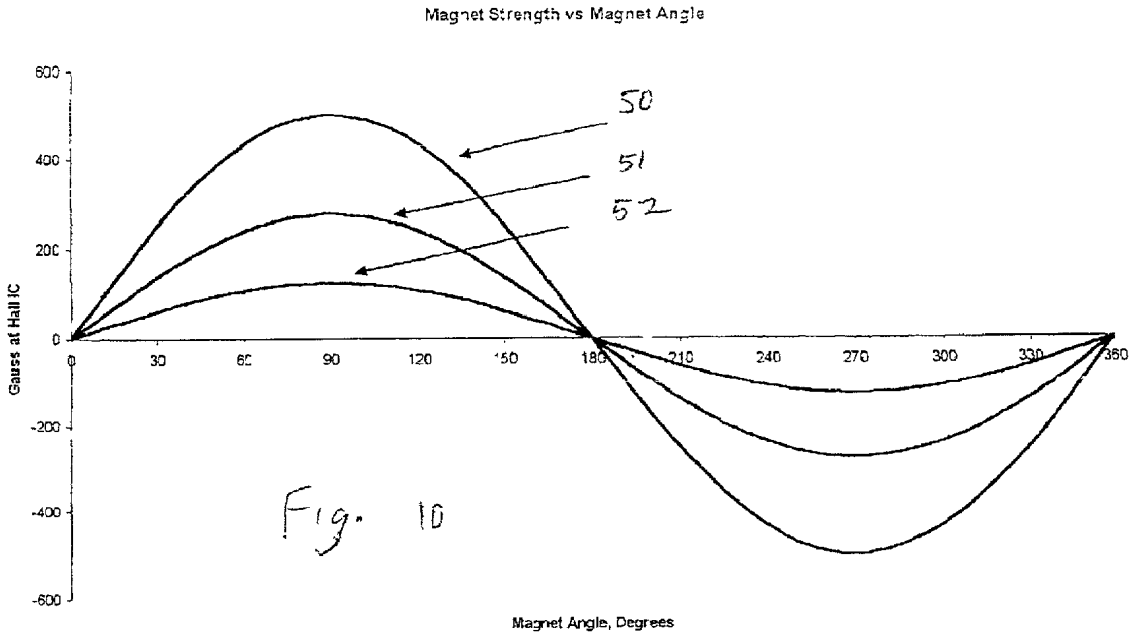
Magnet Strength vs Magnet Angle
600
400
200
0
-200
-400
-600
Gauss at Hall IC
0
30
60
90
120
150
180
210
240
270
300
330
360
Magnet Angle, Degrees
50
51
52

Fig. 10

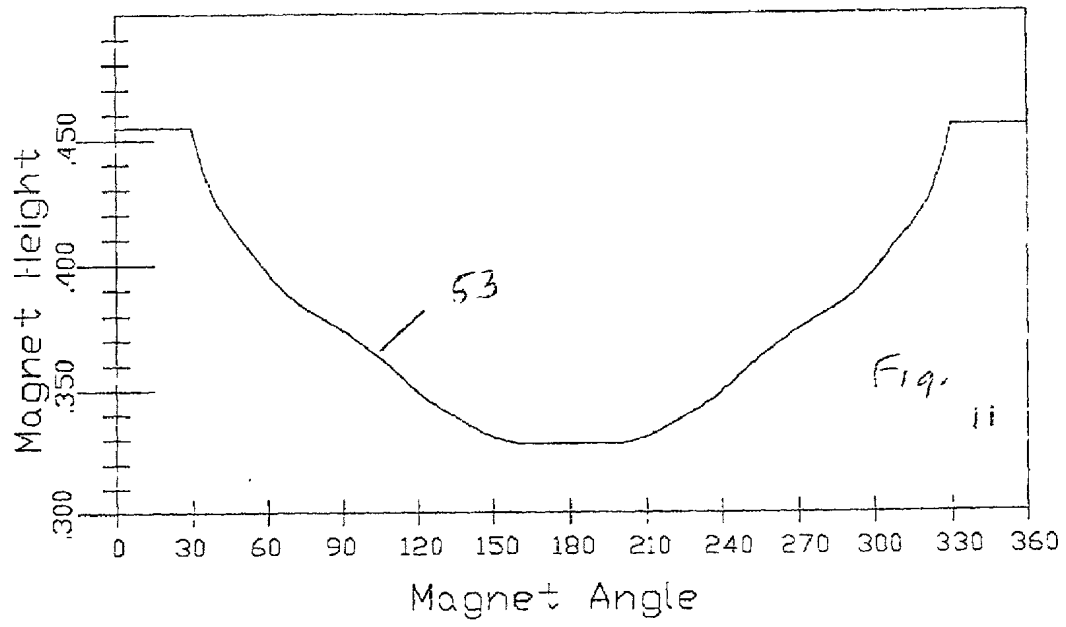

MAGNET HEIGHT VS MAGNET ANGLE FOR LINEAR OUTPUT

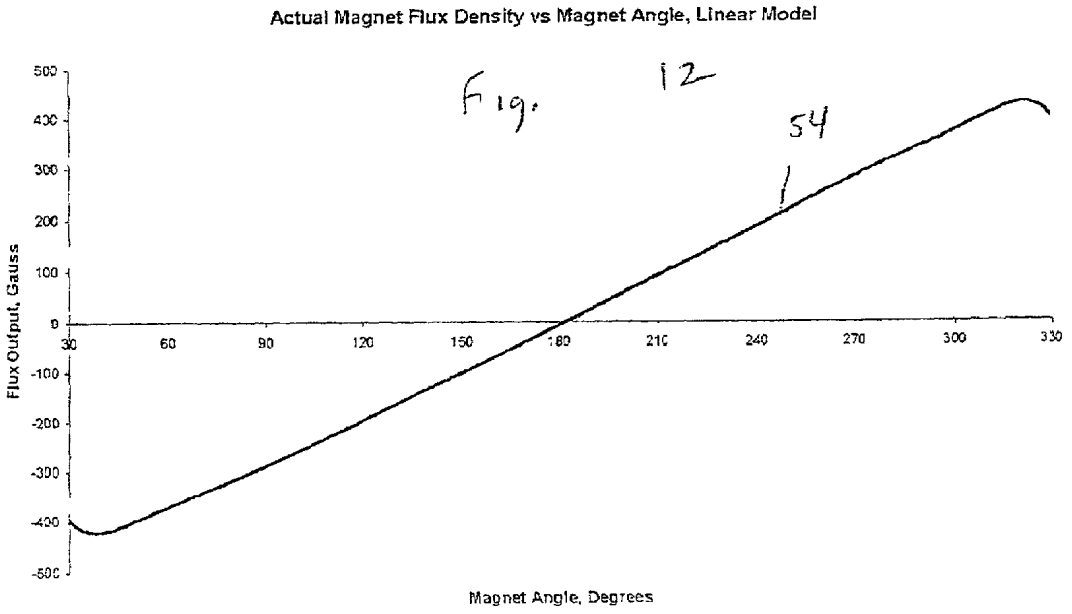

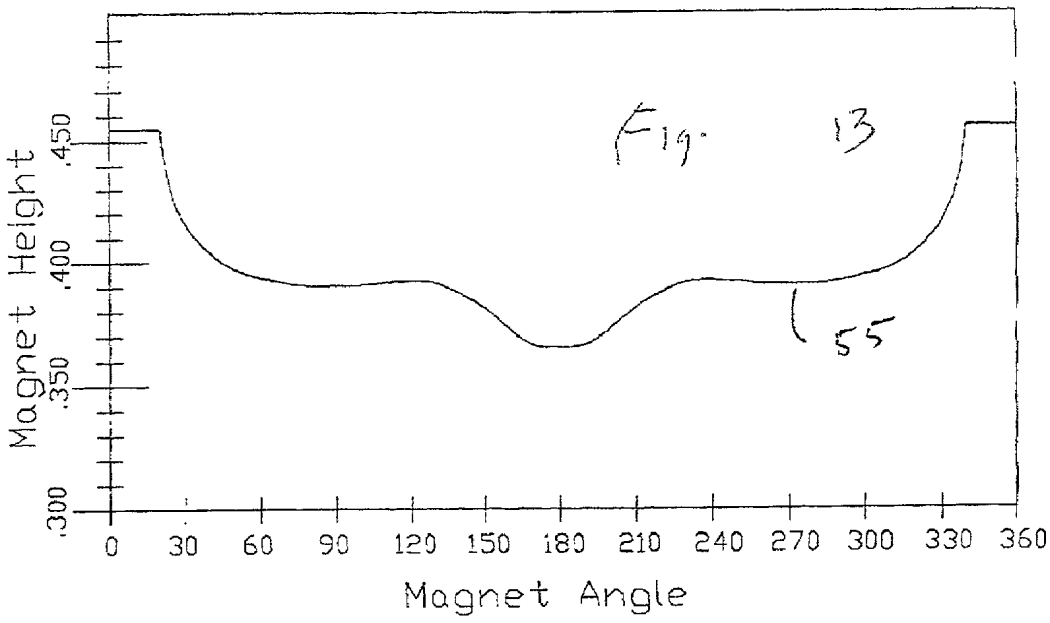

MAGNET HEIGHT VS MAGNET ANGLE FOR NON LINEAR OUTPUT

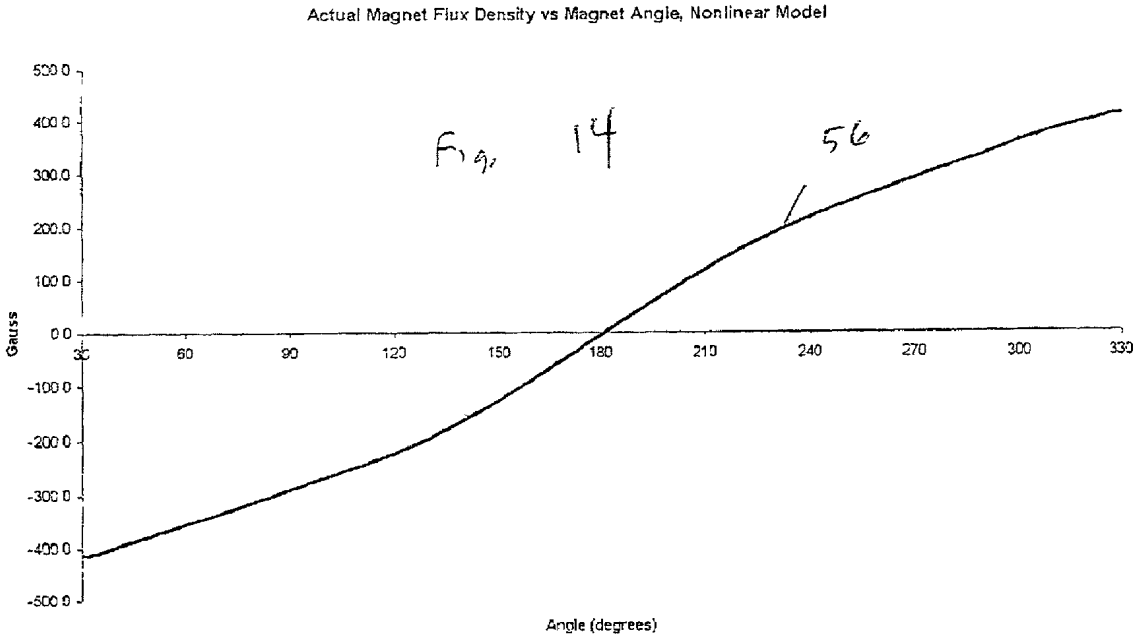

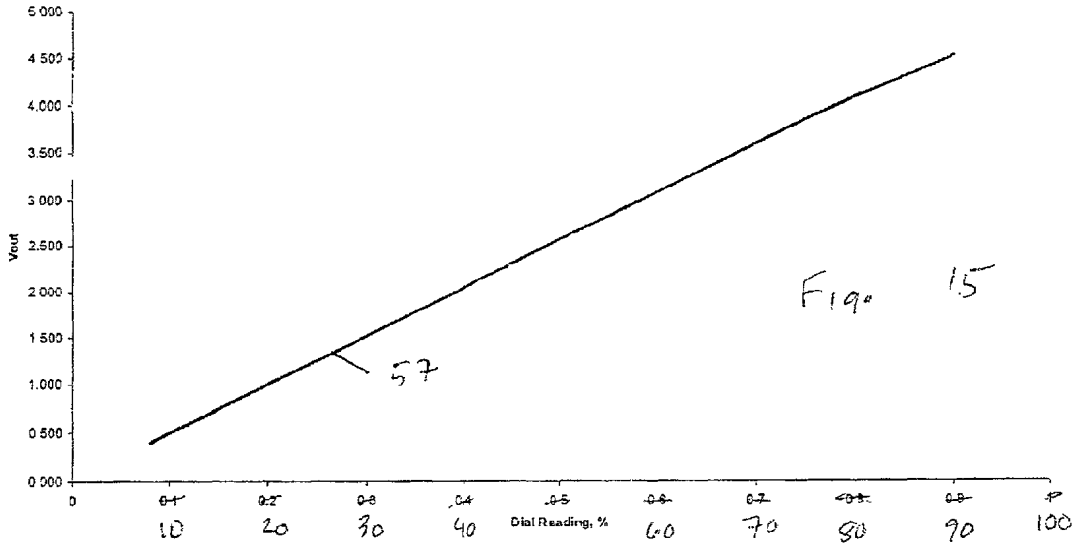
5.000
4.500
4.000
3.500
3.000
2.500
2.000
1.500
1.000
0.500
0.000
Vout
0
10
20
30
40
Dial Reading, %
60
70
80
90
100
57

Fig. 15

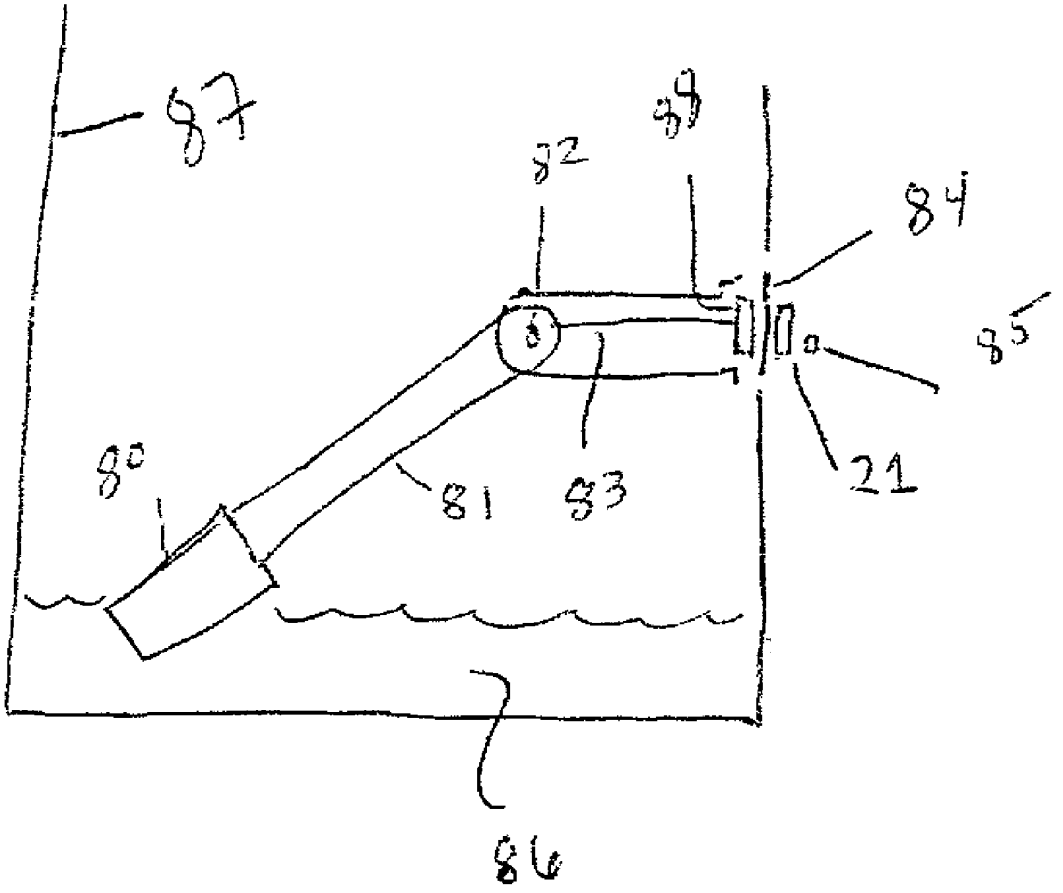

Fig. 16
PRIOR ART

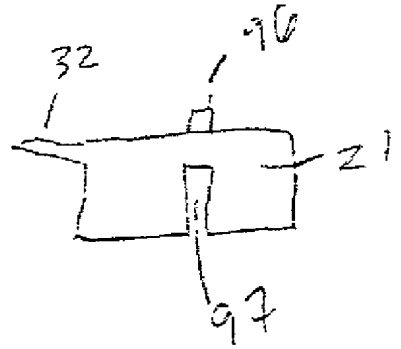

Fig. 17
PRIOR ART

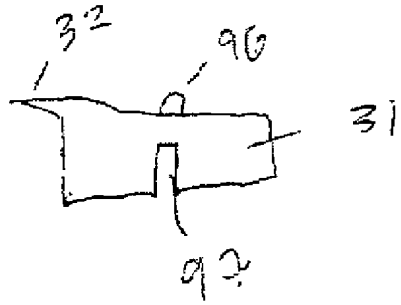

Fig. 18

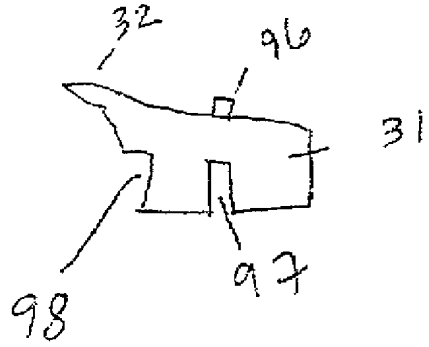

Fig. 19

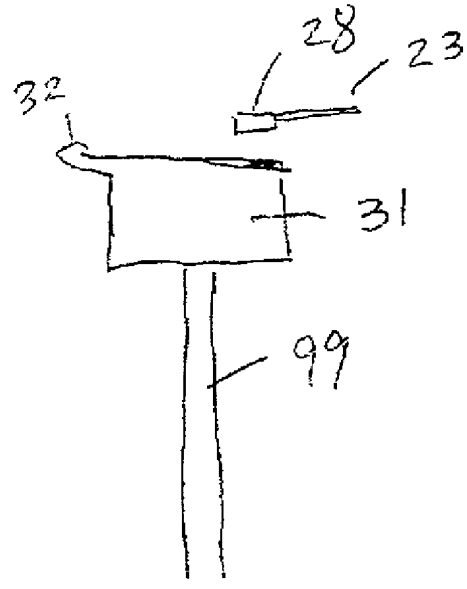

Fig. 20

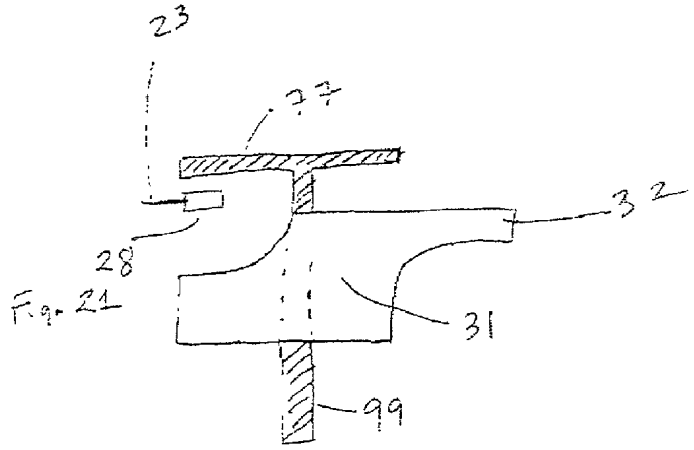

Fig. 21

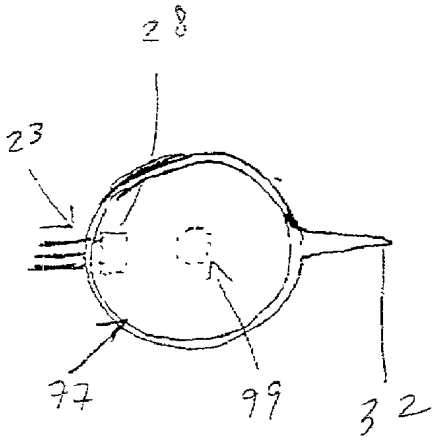

Fig.

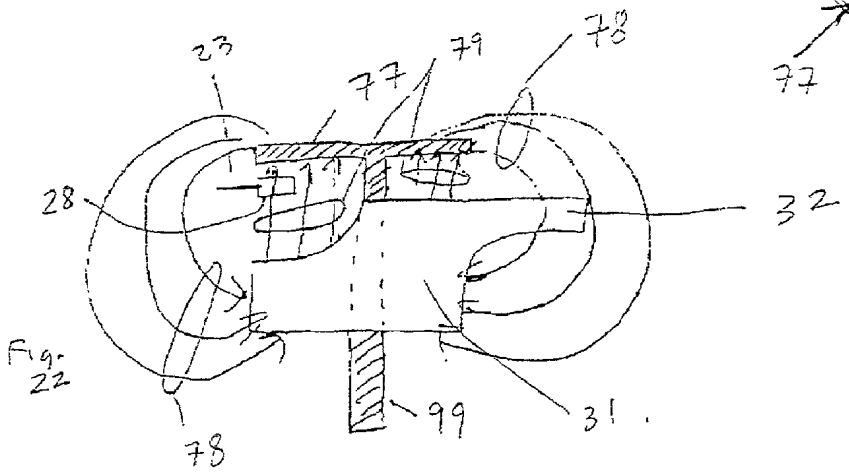

Fig. 22

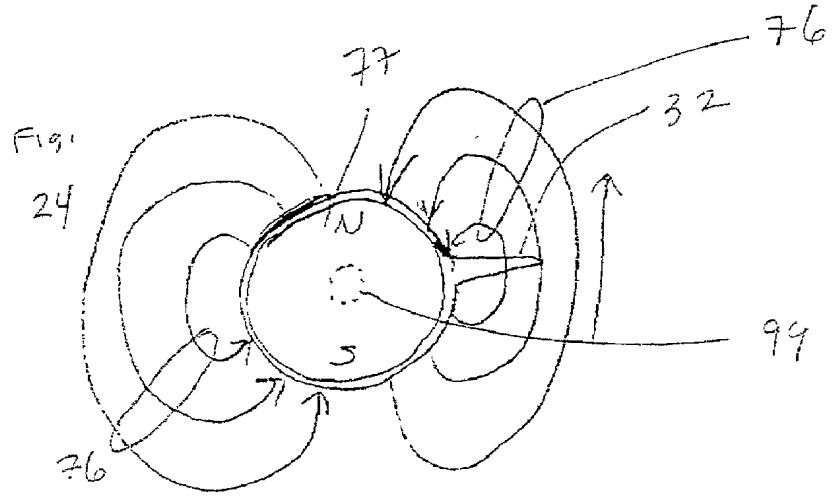

Fig. 24

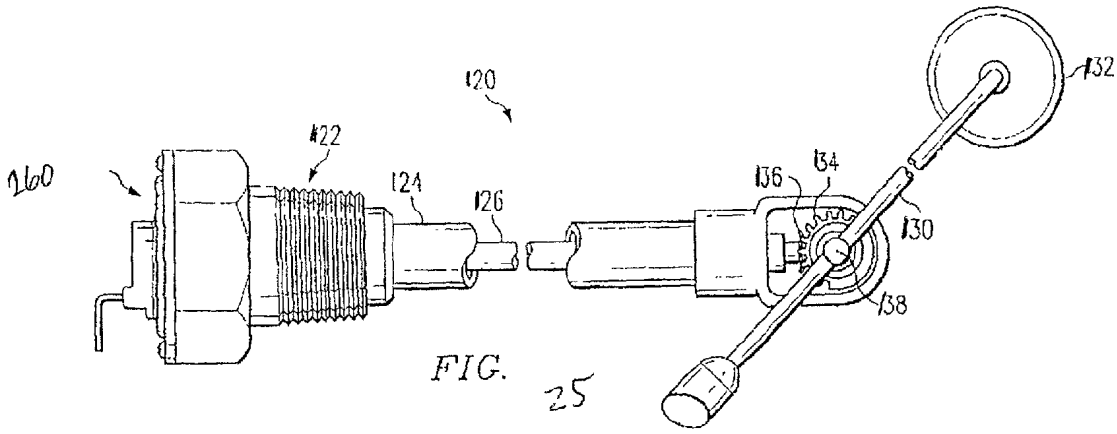
120
122
124
126
130
132
134
136
138
160

FIG. 25

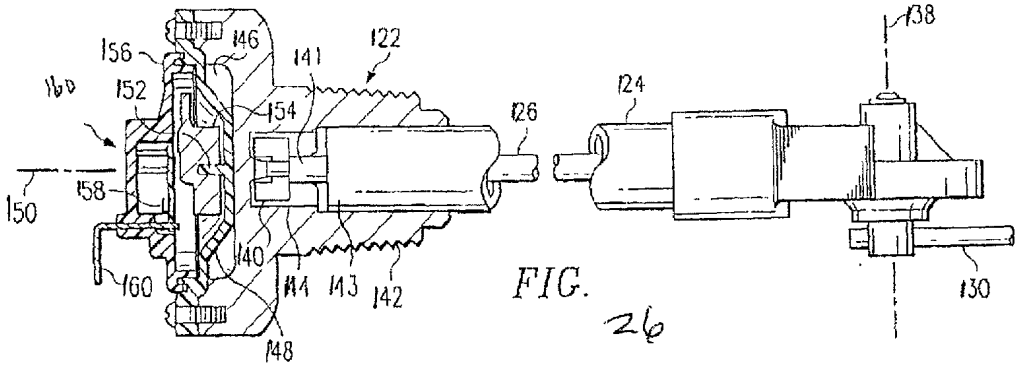
122
124
126
130
138
140
141
142
143
144
146
148
150
152
154
156
158
160

FIG. 26

ANGULAR POSITION SENSOR

BACKGROUND OF INVENTION

[0001] It is not easy to measure liquid levels, especially where the liquids are hazardous or flammable.

[0002] It is well known in the art to provide a float within a container, the float caused to rise and fall by the level of liquid in the container. The float is linked to a rotating first magnet that is within the container, or is at least on the liquid side (inside) of a divider that is joined to an opening in the container. The first magnet is magnetized so that a magnetic moment has a nonzero component at a right angle to the axis of rotation, and preferably its moment is entirely at a right angle to that axis. A second rotating magnet is on the outside of the divider, and is nearly coaxial with and magnetically coupled with the first magnet, likewise having a moment (or a component of the moment) perpendicular to the axis. The second magnet may actuate a pointer providing a human-readable indication of the liquid level. The second magnet is physically nearby to a magnetic flux sensor such as a Hall-effect sensor. The flux sensed in the sensor is indicative of the liquid level. The sensed flux signal is converted from analog to digital and is passed on to other equipment. Mechanisms suitable for use in such apparatus are described, for example, in U.S. Pat. Nos. 4,987,400, 6,041,650, and 6,089,086, incorporated herein by reference.

[0003] Unfortunately, this approach offers many drawbacks. One drawback is that with the conventional and commonly used magnetization and magnet shape, the sensed flux deviates substantially from linearity with respect to the actual liquid level. While such nonlinearity can be corrected in software (after the A/D conversion, for example), this results in variations in resolution across the range of measured physical values such as liquid level, and adds to computational cost.

[0004] Yet another drawback is that with such magnetization and magnet shape, it is impossible to disambiguate certain distinct liquid levels based solely on the sensed flux at a particular time; for disambiguation it is necessary to maintain state information such as historical information about recent sensed values. Such disambiguation requires frequent data collection and depends upon assumptions regarding how quickly the liquid level might change. The disambiguation problem may be avoided by limiting the permitted angular rotation of the magnets, for example by choosing the details of the float linkage, such as gear ratios. This has the drawback of limiting either the resolution of the sensing system or the dynamic range of the sensing system, or requiring a more expensive analog-to-digital convertor.

[0005] It is thus desirable to provide a system for measurement of liquid levels or other physical phenomena, which employs a float or other follower linked to a first magnet, and a second magnet linked to the first magnet, where the electrical output is nearly linear with the physical phenomenon being measured, and wherein the dynamic range is maximized and resolution uncompromised, all without expensive post-processing of data and without expensive high-resolution A/D convertors.

SUMMARY OF INVENTION

[0006] A liquid level sensor is provided for use with a container. The sensor protrudes through an opening in the container. The sensor includes a float linked by means of a linkage to a first magnet axially rotatable on a first axis. The first magnet has a magnetic moment with a nonzero component at a right angle to the axis. A divider separates the first magnet from a second magnet having a magnetization and axially rotatable on a second axis. The second magnet has a nonzero magnetic moment at a right angle to the second axis. The first and second magnets are juxtaposed in magnetic linkage so that the second magnet is urged to follow the first magnet in rotation. The divider plugs the opening in the container. A magnetic field sensor is positioned to sense axial magnetic field strength at a location offset from the second axis. Importantly, the magnetization of the second magnet gives rise to a sensed magnetic field at the sensor that is nonsinusoidal with respect to an angle of rotation of the second magnet on the second axis, or gives rise to north and south poles separated by more than a half-circle or axial rotation of the second magnet.

BRIEF DESCRIPTION OF DRAWINGS

[0007] The invention will be described with respect to a drawing in several figures, of which:

[0008] **FIG. 1** shows a prior art sensing system employing a radially magnetized magnet and a radial sensor;

[0009] **FIG. 2** shows a prior art sensing system employing a radially magnetized magnet and an axial sensor;

[0010] **FIGS. 3***a* and **3***b* show axial and radial views, respectively, of a sensing system such as that of **FIG. 2**;

[0011] **FIG. 4** shows a shaped top magnet according to the invention;

[0012] **FIG. 5** shows a gauge according to the invention employing an intentionally nonlinear dial deflection;

[0013] **FIG. 6** shows a plot of magnetic field strength (e.g. gauss) as a function of magnet angle for a round magnet radially magnetized;

[0014] **FIG. 7** shows a plot of Hall-effect sensed voltage from an axially positioned sensor relative to a radially magnetized magnet, assuming a voltage offset so that all electrical outputs are positive;

[0015] **FIG. 8** shows a plot of Hall-effect sensed voltage from an axially positioned sensor relative to a rotating magnet, assuming a symmetric magnetization, or assuming a magnetization selected to give rise to a linear sensed voltage;

[0016] **FIG. 9** shows a plot of magnetic field strength (e.g. gauss) as a function of air gap between an axial sensor and a magnet radially magnetized;

[0017] **FIG. 10** shows a plot of expected magnetic field strength (e.g. gauss) using an axial sensor and a magnet radially magnetized, as a function of magnet angle, for each of three different choices of air gap;

[0018] **FIG. 11** shows an experimentally determined plot of magnet height at various magnet angles, according to the invention, giving rise to a linear or nearly linear output as a function of magnet angle;

[0019] **FIG. 12** shows an experimentally measured plot of magnetic field strength (e.g. gauss) as a function of magnet angle, according to the invention, using the magnet heights of **FIG. 11**;

[0020] **FIG. 13** shows an experimentally determined plot of magnet height at various magnet angles, according to the invention, giving rise to an intentionally nonlinear output as a function of magnet angle;

[0021] **FIG. 14** shows an experimentally measured plot of magnetic field strength (e.g. gauss) as a function of magnet angle, according to the invention, using the magnet heights of **FIG. 14**;

[0022] **FIG. 15** shows an experimentally measured plot of Hall-effect output voltage as a function of dial reading, according to the invention, which is expected to correlate linearly with liquid level;

[0023] **FIG. 16** shows a typical arrangement of float, float arm, pivot, linkage, and magnet juxtapositions, as found in the prior art and in the system according to the invention;

[0024] **FIG. 17** shows a cross section of a prior art magnet;

[0025] **FIG. 18** shows a cross section of a shaped-top magnet;

[0026] **FIG. 19** shows a cross section of a balanced shaped-top magnet;

[0027] **FIG. 20** shows a shaped-top magnet positioned by means of a shaft;

[0028] **FIG. 21** shows a shaped-top magnet in combination with a flux path element nearly completing a flux loop;

[0029] **FIG. 22** shows the combination of **FIG. 21** together with representative lines of magnetic flux;

[0030] **FIG. 23** shows a top view of the combination of **FIG. 21**;

[0031] **FIG. 24** shows the combination of **FIG. 23** together with representative lines of magnetic flux;

[0032] **FIG. 25** shows a float arrangement in greater detail than **FIG. 16**; and

[0033] **FIG. 26** shows the float arrangement of **FIG. 26** in partial cutaway view.

DETAILED DESCRIPTION

[0034] Turning first to **FIG. 16**, what is shown is a typical arrangement of float **80**, float arm **81**, pivot **82**, linkage **83**, and magnet juxtapositions, as found in the prior art and in the system according to the invention. The float **80** is caused to move upwards and downwards by the downward pull of gravity and by the upward force from the level of the liquid **86**. Float **80** is selected to be less dense, and preferably much less dense, than the liquid **86**. The upward force from the liquid is, of course, a function of the mass of the volume of liquid displaced by the portion of the float that is below the surface of the liquid. The float arm **81** and the rest of the internal parts are selected to have minimal volume so as to minimize the portion of the volume of the container **87** that is unavailable for liquid storage due to the presence of the sensing apparatus. The system is particularly helpful in cases where the liquid **86** is flammable, such as liquified natural gas, liquified propane, gasoline, jet fuel, or diesel fuel. Where the liquid has a relatively high vapor pressure (e.g. liquified natural gas or liquified propane) the container **87** is sealed (in part by divider or partition **84**) and the gas phase and liquid phase of the stored fuel are in equilibrium determined by temperature and other factors. The divider or partition **84** is of course preferably nonmagnetic, so as to permit passage of magnetic flux; in a typical embodiment the divider is aluminum.

[0035] A mechanical linkage is provided which, in an exemplary embodiment, translates rotation of the arm **81** about the pivot **82** into rotation of a shaft **83**. Shaft **83** causes magnet **88** to rotate. Despite the presence of the partition **84**, the magnet **88** is magnetically linked with the magnet **21**. Preferably the two magnets **88**, **21** rotate coaxially. Sensor **85** senses the position of the magnet **21**. The magnet **21** preferably has a radial pointer, omitted for clarity from **FIG. 16**, which is visible to a human user, also omitted for clarity from **FIG. 16**. The radial pointer can point to scale markings permitting the human user to read the liquid level in the container **87**. The scale preferably shows percentage of capacity but may also read in units such as mass or weight or volume of liquid.

[0036] Turning now to **FIGS. 25 and 26**, a typical float arrangement is shown in greater detail. In **FIG. 25**, liquid level gauge **120** is shown, part of which is gauge head **122**.

[0037] Support arm **124** extends away from head **122**. A magnet driveshaft **126** communicates between gears **136**, **134** and a first magnet, not shown in **FIG. 25**.

[0038] Arm **130** rotates about pivot axis **138**, carrying float **132**. Dial assembly **160** provides angle measurement.

[0039] In **FIG. 26**, more detail can be seen of the dial assembly **160**. Gauge head **122** is mounted to a tank (not shown) by threads **142**. Shaft **126** has a first end **141** which is attached to magnet **140**. Magnet **154** follows magnet **140**. Magnetic sensor **158** detects the field from magnet **154**. Passageway **144** contains magnet **140**. Shaft **124** has an end **143** which is mounted to the head **122**. The magnet **154** preferably rotates on a pin **152**, which may be integrally formed with other plastic parts such as base **148** and preferably clear plastic cover **156**. Electrical leads **160** extend from sensor **158**. Base **1148** fits into receptacle **146**.

[0040] It must be appreciated that while **FIGS. 16,25**, and **26** show preferred mechanical arrangements, these particular arrangements are merely considered preferable but are not required to obtain the benefits of the invention.

[0041] **FIG. 1** shows a prior art sensing system employing a radially magnetized magnet **21** and a radial sensor **22**. In such a system the sensor **22** is positioned radially from the magnet **21**. The magnet **21** has a magnetization shown symbolically by arrow **26**, which magnetization is radial and not axial. Those skilled in the art will appreciate that the magnetization might merely have a component in the plane parallel to the axis **27** (coming out of the page) to bring about a measurable signal at the sensor **22**, though it is preferable that the magnetization be wholly within the plane parallel to the axis **27**. This magnetization is stylized by north pole **24** and south pole **25**. Electrical conductors **23** provide ground, power, and sensed signal connections in a preferred embodiment using a three-terminal Hall-effect sensor.

[0042] **FIG. 2** shows a prior art sensing system employing a radially magnetized magnet **21** and an axial sensor **28**. In such a system the sensor **28** is positioned axially from the magnet **21**, and its position is not in the axis **27** but is radially

offset from the axis **27**. It is desirable that the sensor be radially offset as far as possible so as to pick up the strongest magnetic signals and thus to have the best possible signal-to-noise ratio.

[**0043**] **FIGS. 3***a* and **3***b* show axial and radial views, respectively, of a prior art sensing system such as that of **FIG. 2**. **FIG. 3***a* corresponds closely with **FIG. 2**. **FIG. 3***b* shows an air gap **29** which exists because of the nonzero distance between the sensor **28** and the surface of the magnet **21**. The distance is desirably nonzero because it is harmful to have mechanical interference (e.g. friction) which might keep the magnet **21** from freely rotating to follow the magnet **88** (**FIG. 16**).

[**0044**] Turning now to **FIG. 6**, what is shown is a plot of magnetic field strength (e.g. gauss) as a function of magnet angle for a round magnet **21** (**FIG. 3***a*) radially magnetized. The curve is, as expected from theory, essentially sinusoidal. The voltage output from the sensor **28** (**FIG. 3***a*) is portrayed in **FIG. 7**, which shows a plot of Hall-effect sensed voltage from the axially positioned sensor **28** relative to the radially magnetized magnet **21**. In this plot, it is assumed that a voltage offset is applied to the sensed voltage signal so that all electrical outputs are positive. With such an offset, the voltage in this case swings between zero and 5 volts, about a center value of 2.5 volts. The correspondence between **FIGS. 6 and 7** is a consequence not only of this voltage offset but also of a gain assumed to be five millivolts per Gauss. As expected from theory, this curve is also sinusoidal.

[**0045**] The curve of **FIG. 7** illustrates a classic "disambiguation" problem. Suppose the sensed voltage is 1.0 volt. Such a voltage could, on the assumptions underlying **FIG. 7**, result from a magnet angle of about 35 degrees or about 145 degrees. The precise angles are a function of gains and offsets and system geometries. With different gains and angles and geometries the particular angles corresponding to 1.0 volt might be different, but in any event there would be an ambiguity—is the sensor at one angle or at a different angle? There are several ways of dealing with (or avoiding) this ambiguity. One choice is to impose mechanical constraints so that the magnet angle never gets below 90 degrees or above 270 degrees. In fact to accommodate various error ranges, the constraint must impose a margin, so that the angle is never permitted to get below 90+x or above 270−x, where x is some positive value determined by experimentally determined error ranges. Returning to **FIG. 16**, this may require careful selection of the gear ratio between the shaft **83** and the arm **81**. If the magnet **21** carries a human-readable pointer, the pointer is constrained to a range of something less than 180 degrees, making the gauge harder to read because the full-to-empty markings must fit into less than 180 degrees. Such angle restriction also limits the accuracy of the electrical measurements because even a small angle error (in absolute terms) gets magnified into a change of some number of bits after the A/D conversion.

[**0046**] A second way of dealing with this ambiguity is to sample the angle sufficiently frequently that one can be confident of the recent angle position as well as the recent rate of change of the angle (angular velocity). This can permit determining whether the magnet is at 35 degrees or 145 degrees from detailed knowledge of the previous position and velocity. This approach offers many drawbacks, of course. The system must maintain internal states such as historical position and velocity data. In addition, it must provide and allocate computational bandwidth for the necessary frequent sampling of the sensor data. Finally, there is the problem that if power is lost, the float may move during the outage and upon restoration of power it may be impossible to resolve initial ambiguity in the magnet angle.

[**0047**] Yet another problem evident from the curve of **FIG. 7** is the nonlinearity problem. Even if the magnet angle is not permitted to stray beyond 90+x or 270−x, within that range the relationship between voltage and angle is not linear. Depending on the linkage between the float (**FIG. 16**) and the magnet **88** (**FIG. 16**), further nonlinearities may be introduced in the relationship between liquid level and voltage. While such nonlinearities may be corrected later in software, this may add to the hardware cost (by requiring more computational power) and will lead to non-constant resolution in differing parts of the measurement range since differing computational gains must be applied in differing parts of the range for the correction.

[**0048**] **FIG. 9** shows an experimentally measured plot of magnetic field strength (e.g. gauss) as a function of air gap between an axial sensor and a magnet radially magnetized. Referring to **FIG. 3***b*, increasing the air gap **29** decreases the detected magnetic field strength.

[**0049**] **FIG. 10** shows a plot of expected magnetic field strength (e.g. gauss) using an axial sensor and a magnet radially magnetized. The field strength is shown as a function of magnet angle, for each of three different choices of air gap. Curve **50** shows the measured field strength with a close (small) air gap, curve **51** shows the result with an increased air gap, and curve **52** shows the result with an even larger air gap. For one skilled in the art, motivated to attempt to solve the problems discussed here, the dependence of sensed flux on the size of the air gap might prompt any of several approaches. For example, it might be considered to attempt to use an axial cam arrangement to physically move the rotating magnet closer to and further from the sensor as a function of rotation angle, or to use an axial cam arrangement to physically move the sensor closer to or further from the magnet as a function of rotation angle. Such approaches, however, offer several drawbacks. One drawback is that the cam arrangement likely introduces friction which can lead to lags in the response of the magnet **21** to small rotations of the magnet **88**. Yet another is an increase in parts count and thus assembly time and cost, as well as a likely decrease in reliability.

[**0050**] Insight may be drawn from **FIGS. 9 and 10**, to devise a magnet that has a shaped top. Resulting from such insight, **FIG. 4** shows a shaped-top magnet **31** according to the invention. The magnet **31** offers a low point **33**, roughly midway between the north and south poles **24**, **25**. The magnet **31** offers high points **34** roughly opposite from the low point **33**. The magnet **31** also preferably has a pointer **32** providing a human-readable indication of the magnet angle. Optionally the shaped-top magnet may locate the north and south poles at an angular relationship that is not 180 degrees apart. For example the north and south poles might be up to 300 degrees apart (or, completing the circle, 60 degrees apart).

[**0051**] **FIG. 8** shows a plot of Hall-effect sensed voltage from an axially positioned sensor relative to a rotating

magnet, assuming a symmetric magnetization and assuming a flat top, or assuming a magnetization and top shape selected to give rise to a linear sensed voltage. The axes of **FIG. 8** carry the same units as the axes of **FIG. 7**. The vertical scale is Hall-effect sensed voltage, taking into account the same offset discussed above in connection with **FIG. 7**, so that the range of output voltages is always positive with a center of travel at about 2.5 volts. Dotted line **41** shows the expected sinusoidal relationship between angle and measured voltage, just as in **FIG. 7**, on the assumption that the magnet has a flat (not shaped) top and has north and south poles 180 degrees apart.

[**0052**] With appropriate placement of the north and south poles, and with appropriate shaping of the top of the magnet, very desirable results may be obtained. Curve **43** (actually a straight line) offers a relationship between measured voltage and magnet angle that fulfills two important and previously unattained conditions—the relationship between voltage and angle are linear, and the physically measurable range is from 30 degrees to 330 degrees. This range, covering 300 degrees of rotation without any ambiguities as would be found with the curve of line **41**, is much better than the somewhat less than 180 degrees available with the curve of line **41**.

[**0053**] **44** is intentionally nonlinear when compared with line **43**. It must be recalled that the actual design goal is not linearity between magnet angle and voltage, but linearity between liquid level and voltage. The float linkage (for example that of **FIG. 16**) is itself somewhat nonlinear in the relationship between liquid level and magnet angle. Appropriate choices of magnet top shape **(FIG. 4)** can bring about intentional nonlinearity between magnet angle and voltage that bring about an overall linear relationship between liquid level and voltage.

[**0054**] Those skilled in the art will appreciate that there may be other sources of nonlinearity in the relationship between liquid level and magnet angle. The container **87** might have a non-constant cross section as a function of the liquid level. This could happen if, for example, the container were spherical instead of cylindrical. Even if the container **87** were chiefly cylindrical, it might have a hemispherical bottom (as in a small hand-carried LP tank) or might be a lateral cylinder with hemispherical ends (as in a residential heating fuel LP tank). In any of these cases, the magnet top is advantageously shaped to give rise to overall linearity between the amount of liquid present and the measured voltage.

[**0055**] Those skilled in the art will readily appreciate that the benefits of the invention do not depend on a particular mechanical linkage such as that shown in **FIG. 16**. Indeed those skilled in the art will have no difficulty devising other mechanical linkages and float arrangements that likewise benefit from the invention. For example, the shaft **83** could be vertical instead of horizontal, with the magnet **88** rotating at the top of the shaft in a horizontal plane. The shaft **83** could then be threaded with a partial thread, with the float freely sliding up and down the shaft, causing the shaft to rotate to an angle determined by the height of the float. Appropriate selection of magnet top shape can give overall linearity for other mechanical linkages and float arrangements.

[**0056**] Still another possibility is that the physical phenomenon being sensed is not communicated with a shaft but is instead communicated by linkage with a crank arm.

[**0057**] **FIG. 5** shows a gauge according to the invention employing an intentionally nonlinear dial deflection. Pointer **32** is visible, and the markings from E (empty) to full span well over 180 degrees. A clear cover protects the magnet **31** and permits a user to see the pointer. Connection points **23** provide connections to the Hall-effect sensor, not visible in **FIG. 5**.

[**0058**] **FIG. 11** shows an experimentally determined plot **53** of magnet height at various magnet angles, according to the invention, giving rise to a linear or nearly linear output as a function of magnet angle. If it is desired to have a linear relationship between magnet angle and voltage, then it is advantageous to use a shaped top magnet with the top heights chosen according to **FIG. 11**.

[**0059**] One way to describe the plot **53**, and to describe the shaped-top magnet defined by the plot **53**, is to say that the magnet has a face proximal to a magnetic field sensor, the face of the magnet shaped to provide a varying gap between the face of the magnet and the magnetic field sensor as a function of an angle of rotation of the magnet on its axis, the shape of the face selected to provide a first gap at a first angular position, a second gap larger than the first gap at a second angular position, and a third gap smaller than the second gap at a third angular position. The difference between the first and third angular positions may be greater than 200 degrees, and preferably may be greater than 250 degrees, and indeed may be greater than 280 degrees.

[**0060**] Those skilled in the art will appreciate that different materials will produce different flux outputs as a function of the size of the air gap, and that different physical shapes may be needed depending on the choice of material. An exemplary material for the shaped top magnet is ferrite molded with a polymer binder material to the desired shape, and then magnetized.

[**0061**] **FIG. 12** shows an experimentally measured plot of magnetic field strength (e.g. gauss) as a function of magnet angle, according to the invention, using the magnet heights of **FIG. 11**. The curve **54** shows good linearity from less than 50 degrees to more than 310 degrees. This is consistent with the linear plot **43** in **FIG. 8**, differing in that **FIG. 8** shows voltage as a function of angle, whereas **FIG. 12** shows magnetic field strength as a function of angle. **FIG. 8** also assumes an offset so that all voltages are positive, whereas the field strengths of **FIG. 12** range from positive to negative.

[**0062**] mentioned above, the system goal is usually not linearity between magnet angle and voltage, but linearity between liquid level and voltage. As such, the relationship between magnet angle and voltage should be intentionally nonlinear in a way that corrects for nonlinearity between liquid level and magnet angle. Turning now to **FIG. 14**, it might develop that the desired nonlinearity is that shown in curve **54** of **FIG. 14**. **FIG. 13**, then, shows an experimentally determined plot **55** of magnet height at various magnet angles, according to the invention, giving rise to an intentionally nonlinear output as a function of magnet angle as shown in **FIG. 14**.

[**0063**] As discussed, the nonlinearity of the float and linkage is preferably compensated by a correcting nonlinearity in the relationship between magnet angle and voltage. **FIG. 15** shows an experimentally measured plot **57** of

Hall-effect output voltage as a function of dial reading, according to the invention. As may be appreciated, the relationship is nearly linear across almost all of the range from 10% to 90%. With appropriate choices of float and linkage, the measurement range could extend from 0% to 100%. With many real-life applications, however, such as knowing when to refill a tank, it suffices to measure values between 10% and 90%.

[0064] Those skilled in the art are familiar with standard, prior-art Hall-effect sensors which have integral temperature compensation circuitry. In particular, the above-mentioned three-terminal Hall-effect sensors are available as standard parts with temperature compensation circuitry. Some such parts are programmable by the user to define particular temperature compensation behavior. The obvious use of the programmability of the temperature compensation circuitry is to achieve a nearly constant output of the sensor, as a function of sensed magnetic flux or sensed physical position, despite changes in temperature.

[0065] As mentioned above, the equilibrium between liquid and gas phases in a liquified propane or liquified natural gas storage tank is a function of several factors including temperature. For safety, it is desired never to fill the tank fully with liquid, but always to leave a portion of the tank for the gas phase. One safety goal is to avoid an excessive level of gas pressure in the tank. The portion of the tank to be left for the gas phase for safety reasons is, itself, a function of temperature. Those skilled in the art will thus appreciate that the question "is the tank full?" is not exactly the same as "what is the liquid level in the tank?" When the temperature is low, the vapor pressure decreases, and the equilibrium in the tank tends to shift toward the liquid phase. It is desirable not to fill the tank as fully if the temperature is low, because later if the temperature increases the vapor pressure would increase and the equilibrium would shift somewhat toward the gas phase.

[0066] In accordance with the invention, it is thus possible to program the temperature compensation circuitry of the Hall-effect sensor so as to take into account (at least partially) the effect of temperature on the stored liquified gas. In a typical application of this aspect of the invention, the temperature compensation circuitry of the Hall-effect sensor is programmed so that the electrical signal indicative of a "full" tank is generated by any of several levels of sensed magnetic flux, depending on temperature. If it is cold, the amount of sensed flux needed to generate a "full" electrical output is less then if it is warm, for example. The programming of the temperature compensation circuitry, together with appropriate selection of magnet shape and other system geometries, can thus achieve an approximation of the full or empty status of the storage enclosure that is more useful than merely detecting a liquid level.

[0067] This desirable result which takes temperature into account may also be accomplished by providing a temperature sensor separate from the magnetic field sensor but housed nearby to it, with appropriate circuitry to take temperature into account before the signal for lines **23** is generated.

[0068] Stated differently, the sensing system may include a temperature sensor, the sensing system further characterized as being used with a liquid having a vapor pressure and a container having a geometry and volume, the magnetic field sensor emitting a signal indicative of sensed magnetic field strength, the system further comprising compensation means compensating the signal with respect to the sensed temperature and the liquid having a vapor pressure and with respect to the container having a geometry and volume to yield the electrical output, whereby the electrical output is indicative of the fullness of the container.

[0069] **17** shows a side cross section of a magnet **21** according to the prior art. An axial hole **97**, centered in the bottom face of the magnet **21**, is formed so that the magnet can rotate upon a stationary spindle, omitted for clarity in **FIG. 17**. A feature **96** formed onto the top of the magnet **21** preferably defines a mechanical tolerance for axial movement of the magnet **21** within its housing. In the system according to the invention, as described above, the magnet **31** has a shaped top, and part of the shaping of the top may be perceived in **FIG. 18** in the slope that is downward to the right at the top of the magnet **31**.

[0070] A full consideration of the forces acting upon the magnet **21** or **31** would take into account not only the magnetical dipole of magnet **88**, but also gravity. If the axis of rotation of magnet **21** or **31** is vertical, then gravity will not tend to cause rotation of the magnet **21**, **31**. In some applications, however, the gauging system may be positioned so that the axis of rotation is non-vertical. In such applications, it may be appreciated that the magnet **31** may have a center of mass that is not on-axis. The center of mass is shifted by the mass of the pointer **32** and by the shaping of the top of the magnet **31**. In **FIG. 19**, for example, the center of mass is to the left of the center hole **97**. Thus, according to the invention, it is desirable to provide a relief area **98**. With appropriate selection of the relief area **98**, the center of mass can be shifted back toward the axis defined by center hole **97**. In this way, the angle of the magnet **31** is substantially unaffected by gravity and thus provides more accurate readings. Stated differently, the magnet **31** will track the magnet **88** more faithfully because it is gravitationally balanced.

[0071] While the inventive benefits of the shaped-top magnet have been described in detail above in a system where the magnet **31** rotates due to magnetic coupling to another magnet **88**, it should be appreciated that these same benefits may be enjoyed in systems employing other couplings. As shown in **FIG. 20, a** shaped-top magnet **31** may be caused to rotate because of a direct mechanical connection with an axle **99**. Rotation of the axle **99** causes a rotation of shaped-top magnet **31**, the angle of which is sensed by means of sensor **28** with electrical leads **23**. The pointer **32** may or may not be needed, depending on whether there is a need for a user to be able to observe the position, for example on a scale.

[0072] another possibility is that the physical phenomenon being sensed is not communicated with a shaft or axle **99** but is instead communicated by linkage with a crank arm or some other mechanical linkage.

[0073] Turning now to **FIG. 21**, what is shown is a shaped-top magnet in combination with a flux path element nearly completing a flux loop. Magnet **31** has optional pointer **32** as described above. Magnet **31** is caused to rotate,

either by magnetic linkage to a second magnet such as described above, or by mechanical linkage such as to shaft **99**. A washer **77** may be fixed to the magnet **31** and thus rotates with the magnet **31**. Magnetic sensor **28** is positioned between the washer **77** and the magnet **31**.

[**0074**] **FIG. 22** shows the combination of **FIG. 21** together with representative lines of magnetic flux **78**, **79**. Importantly, the lines of flux **79** are fairly close to being parallel, which is a rather different situation than would obtain in the absence of washer **77**. In the absence of washer **77**, the lines of flux **79** would likely diverge like the lines **78**. Such divergence leads to loss of accuracy if the magnet **31** moves axially, as might happen in some situations, for example with wear in axial bearings on the shaft **99**. The presence of the washer **77**, made of a material selected for its ability to provide an easy flux path, leads to the fairly parallel lines **79**. Lines **79** may indeed develop to be not only parallel but axial, all of which contributes to the result that readings at the sensor **28** are fairly consistent even with axial movement of the magnet **31**.

[**0075**] It should be appreciated that the arrangement with the washer **77** fixed to the magnet **31** is thought to be preferable, but some of the benefits of the invention would also be available if the washer were fixed to a housing and did not rotate with the magnet **31**.

[**0076**] **FIG. 23** shows a top view of the combination of **FIG. 21**. The optional pointer **32** may be seen, as well as the washer **77**. Shaft **99** and sensor **28** are shown in phantom. **FIG. 24** shows the combination of **FIG. 23** together with representative lines of magnetic flux **76**. As may be seen, a typical configuration has north and south poles as shown in **FIG. 24**.

[**0077**] pointer **32** may be formed with the magnet **31**, but may also be formed with the washer **77** or may be some non-magnetic material attached to the washer **77**. Alternatively, washer **77** may bear a scale which is read relative to a fixed pointer attached to a housing, not shown in **FIG. 24**.

[**0078**] The flux path element is shown as a washer **77**, but it should be appreciated that its benefits are available even if the washer is not fully circular. For example, the flux path element could be a semicircular disk positioned so that it covers the range of movement about the sensor. It can be of iron or magnetic steel or could be integrally formed with the magnet **31** and from the same material as the magnet **31**.

[**0079**] It should also be appreciated that the system of two linked magnets offers its benefits even if the physical quantity being sensed is not a liquid level measured with a float. The separation between the two magnets can separate any two environments, one of which might be an environment of a hazardous or flammable gas, or might be under very different air pressure, for example.

[**0080**] It should likewise be appreciated that the linearization approach described here offers its benefits even if there is no need to extend range past 180 degrees.

[**0081**] Those skilled in the art will have no difficulty identifying and devising myriad obvious variations of the invention without departing in any way from the invention, as defined by the claims which follow.

1. A liquid level sensing system for use with a container and protruding through an opening in the container, the sensing system comprising:

a float;

a first magnet, said first magnet axially rotatable on a first axis, said first magnet having a magnetic moment with a nonzero component at a right angle to the axis;

a linkage between the float and the first magnet causing the first magnet to rotate in response to movement of the float;

a second magnet having a magnetization, said second magnet axially rotatable on a second axis, said magnetization of the second magnet giving rise to a nonzero component at a right angle to the second axis, the first and second magnets juxtaposed in magnetic linkage so that the second magnet is urged to follow the first magnet in rotation;

a divider separating the first and second magnets, the divider plugging the opening in the container;

a magnetic field sensor positioned to sense axial magnetic field strength at a location offset from the second axis;

the second magnet having a face proximal to the magnetic field sensor, the second magnet giving rise to a sensed magnetic field at the magnetic field sensor, the axial face of the second magnet shaped to provide a varying gap between the face of the second magnet and the magnetic field sensor as a function of an angle of rotation of the second magnet on the second axis, the shape of the face selected to provide a first gap at a first angular position, a second gap larger than the first gap at a second angular position, and a third gap smaller than the second gap at a third angular position, the difference between the first and third angular positions being greater than 200 degrees, the second angular position being between the first and third angular positions.

2. The sensing system of claim 1 wherein the magnetic field sensor is a Hall-effect sensor.

3. The sensing system of claim 1 wherein the difference is greater than 250 degrees.

4. The sensing system of claim 1 wherein the difference is greater than 280 degrees.

5. The sensing system of claim 1 wherein the second magnet is further characterized in that its center of mass is substantially on the second axis.

6. The sensing system of claim 1 wherein the second magnet further comprises a pointer, the pointer visible to a user.

7. The sensing system of claim 6 wherein the second magnet is further characterized in that its center of mass is substantially on the second axis.

8. The sensing system of claim 1 further comprising an electrical output and a temperature sensor, the sensing system further characterized as being used with a liquid having a vapor pressure and a container having a geometry and volume, the magnetic field sensor emitting a signal indicative of sensed magnetic field strength, the system further comprising compensation means compensating the signal with respect to the sensed temperature and the liquid having a vapor pressure and with respect to the container

having a geometry and volume to yield the electrical output, whereby the electrical output is indicative of the fullness of the container.

9. The sensing system of claim 1 further comprising a flux path element positioned relative to the second magnet with the magnetic field sensor between the second magnet and the flux path element.

10. A liquid level sensing system for use with a container and protruding through an opening in the container, the sensing system comprising:

a float;

a first magnet, said first magnet axially rotatable on a first axis, said first magnet having a magnetic moment with a nonzero component at a right angle to the axis;

a linkage between the float and the first magnet causing the first magnet to rotate in response to movement of the float;

a second magnet having a magnetization, said second magnet axially rotatable on a second axis, said magnetization of the second magnet giving rise to a nonzero component at a right angle to the second axis, the first and second magnets juxtaposed in magnetic linkage so that the second magnet is urged to follow the first magnet in rotation;

a divider separating the first and second magnets, the divider plugging the opening in the container;

a magnetic field sensor positioned to sense axial magnetic field strength at a location offset from the second axis;

the magnetization of the second magnet giving rise to north and south poles separated by more than 200 degrees of axial rotation of the second magnet on the second axis.

11. The sensing system of claim 10 wherein the magnetic field sensor is a Hall-effect sensor.

12. The sensing system of claim 10 wherein the separation of the north and south poles of the second magnet exceeds 250 degrees.

13. The sensing system of claim 12 wherein the separation of the north and south poles of the second magnet exceeds 280 degrees.

14. The sensing system of claim 10 further comprising a flux path element positioned relative to the second magnet with the magnetic field sensor between the second magnet and the flux path element.

15. An angle sensing system comprising:

a magnet having a magnetization, said magnet axially rotatable on an axis, said magnetization of the magnet giving rise to a nonzero component at a right angle to the axis;

a magnetic field sensor positioned to sense axial magnetic field strength at a location offset from the axis;

the magnet having a face proximal to the magnetic field sensor, the magnet giving rise to a sensed magnetic field at the magnetic field sensor, the face of the magnet shaped to provide a varying gap between the face of the magnet and the magnetic field sensor as a function of an angle of rotation of the magnet on the axis, the shape of the face selected to provide a first gap at a first angular position, a second gap larger than the first gap at a second angular position, and a third gap smaller than the second gap at a third angular position, the difference between the first and third angular positions being greater than 200 degrees, the second angular position being between the first and third angular positions.

16. The sensing system of claim 15 wherein the magnetic field sensor is a Hall-effect sensor.

17. The sensing system of claim 15 wherein the difference is greater than 250 degrees.

18. The sensing system of claim 17 wherein the difference is greater than 280 degrees.

19. The sensing system of claim 15 wherein the magnet further comprises a pointer, the pointer visible to a user.

20. The sensing system of claim 15 further comprising a flux path element positioned relative to the magnet with the magnetic field sensor between the magnet and the flux path element.

21. A sensing system for use with a boundary and protruding through an opening in the boundary, the sensing system comprising:

a first magnet, said first magnet axially rotatable on a first axis, said first magnet having a magnetic moment with a nonzero component at a right angle to the axis;

a linkage between a sensed phenomenon and the first magnet causing the first magnet to rotate in response to the sensed phenomenon;

a second magnet having a magnetization, said second magnet axially rotatable on a second axis, said magnetization of the second magnet giving rise to a nonzero component at a right angle to the second axis, the first and second magnets juxtaposed in magnetic linkage so that the second magnet is urged to follow the first magnet in rotation;

a divider separating the first and second magnets, the divider plugging the opening in the boundary;

a magnetic field sensor positioned to sense axial magnetic field strength at a location offset from the second axis;

the second magnet having a face proximal to the magnetic field sensor, the second magnet giving rise to a sensed magnetic field at the magnetic field sensor, the axial face of the second magnet shaped to provide a varying gap between the face of the second magnet and the magnetic field sensor as a function of an angle of rotation of the second magnet on the second axis, the shape of the face selected to provide a first gap at a first angular position, a second gap larger than the first gap at a second angular position, and a third gap smaller than the second gap at a third angular position, the difference between the first and third angular positions being greater than 200 degrees, the second angular position being between the first and third angular positions.

22. The sensing system of claim 21 wherein the magnetic field sensor is a Hall-effect sensor.

23. The sensing system of claim 21 wherein the difference is greater than 250 degrees.

24. The sensing system of claim 23 wherein the difference is greater than 280 degrees.

25. The sensing system of claim 21 wherein the second magnet is further characterized in that its center of mass is substantially on the second axis.

26. The sensing system of claim 21 wherein the second magnet further comprises a pointer, the pointer visible to a user.

27. The sensing system of claim 26 wherein the second magnet is further characterized in that its center of mass is substantially on the second axis.

28. A sensing system for use with a boundary and protruding through an opening in the boundary, the sensing system comprising:

a first magnet, said first magnet axially rotatable on a first axis, said first magnet having a magnetic moment with a nonzero component at a right angle to the axis;

a linkage between a sensed phenomenon and the first magnet causing the first magnet to rotate in response to the sensed phenomenon; second magnet having a magnetization, said second magnet axially rotatable on a second axis, said magnetization of the second magnet giving rise to a nonzero component at a right angle to the second axis, the first and second magnets juxtaposed in magnetic linkage so that the second magnet is urged to follow the first magnet in rotation;

a divider separating the first and second magnets, the divider plugging the opening in the boundary;

a magnetic field sensor positioned to sense axial magnetic field strength at a location offset from the second axis;

the magnetization of the second magnet giving rise to north and south poles separated by more than 200 degrees of axial rotation of the second magnet on the second axis.

29. The sensing system of claim 28 wherein the magnetic field sensor is a Hall-effect sensor.

30. The sensing system of claim 28 wherein the separation of the north and south poles of the second magnet exceeds 250 degrees.

31. The sensing system of claim 28 wherein the separation of the north and south poles of the second magnet exceeds 280 degrees.

32. The sensing system of claim 28 further comprising a flux path element positioned relative to the second magnet with the magnetic field sensor between the second magnet and the flux path element.

33. An angle sensing system comprising:

a magnet having a magnetization, said magnet axially rotatable on an axis, said magnetization of the magnet giving rise to a nonzero component at a right angle to the axis;magnetic field sensor positioned to sense axial magnetic field strength at a location offset from the axis;

the magnet having a face proximal to the magnetic field sensor, the magnet giving rise to a sensed magnetic field at the magnetic field sensor, the face of the magnet shaped to provide a varying gap between the face of the magnet and the magnetic field sensor as a function of an angle of rotation of the magnet on the axis, the shape of the face selected to provide a first gap at a first angular position, a second gap larger than the first gap at a second angular position, and a third gap smaller than the second gap at a third angular position, the second angular position being between the first and third angular positions.

34. The sensing system of claim 33 wherein the magnetic field sensor is a Hall-effect sensor.

35. The sensing system of claim 33 wherein the difference between the first and third angular positions is greater than 200 degrees.

36. The sensing system of claim 35 wherein the difference is greater than 250 degrees.

37. The sensing system of claim 36 wherein the difference is greater than 280 degrees.

38. The sensing system of claim 33 wherein the magnet further comprises a pointer, the pointer visible to a user.

39. The sensing system of claim 33 further comprising a flux path element positioned relative to the second magnet with the magnetic field sensor between the second magnet and the flux path element.

* * * * *